Concord Super Series 4

Installation, Commissioning and Servicing Instructions

50 to 600 Vertical and 250 to 600 Horizontal Modular Gas Fired Boilers

---

Assembly and Installation Instructions for Ideal Concord Super Series 4 Modular Gas Fired heating boilers should be read in conjunction with the general technical data tables enclosed.

CAUTION. To avoid the possibility of injury during the installation, servicing or cleaning of this appliance care should be taken when handling edges of sheet steel components.

G.C. Appliance		Number	G.C. Appliance		Number
Concord Super Series 4	50 V	41 429 78	Concord Super Series 4	350 V	41 429 85
Concord Super Series 4	100 V	41 429 79	Concord Super Series 4	400 V	41 429 86
Concord Super Series 4	150 V	41 429 80	Concord Super Series 4	450 V	41 429 87
Concord Super Series 4	150 VA	41 429 81	Concord Super Series 4	500 V	41 429 88
Concord Super Series 4	200 V	41 429 82	Concord Super Series 4	550 V	41 429 89
Concord Super Series 4	250 V	41 429 83	Concord Super Series 4	600 V	41 429 90
Concord Super Series 4	300 V	41 429 84	Concord Super Series 4	450 H	41 429 91
Concord Super Series 4	250 H	41 429 92	Concord Super Series 4	500 H	41 429 94
Concord Super Series 4	300 H	41 429 93	Concord Super Series 4	550 H	41 429 95
			Concord Super Series 4	600 H	41 429 96

spares & parts online
IBASIS.co.uk©

CONTENTS

Assembly **18**
Electrical data **18**
Exploded diagrams **19**

Combustion Data Sheet **36**

Commissioning and Testing **22**

General **3**
Installation requirements **3**
Technical data **4**
Boiler house clearances **6**
Flue requirements **7**
Design requirements **12**
Electrical data **14**

Installation **8**
Dimentional data **8**

Service & Fault Finding **27**
Cleaning **27**
Replacements **30**
Short list of parts **33**

INTRODUCTION

The Ideal Concord Super range of boilers is suitable for connection to fully pumped, open vented or pressurised central heating, indirect domestic hot water and combined systems - in commercial and industrial premises.

Note. British Gas certification does not apply to pressurised systems.

DUTY

The range of boiler is suitable for: combined indirect pumped domestic hot water and central heating systems; independent indirect pumped domestic hot water or central heating systems.

Fully pumped systems may be open vented or sealed.

The range of boiler is NOT suitable for:

1. Gravity DHW systems.
2. Gravity heating systems.
3. Direct domestic hot water supply.

FOUNDATION

The boiler must stand on a non-combustible floor (i.e. concrete or brick) which must be flat, level and of a suitable load bearing capacity to support the weight of the boiler (when filled with water) and any ancillary equipment.

GAS SAFETY (INSTALLATION AND USE) REGULATIONS, 1994

All gas appliances must, by law, be installed by competent persons, e.g. CORGI in accordance with the above regulations. Failure to install appliances correctly could lead to prosecution.

It is in your own interest, and that of safety, to ensure that the law is complied with.

In addition, the installation must comply with the relevant British Standard Specifications and Codes of Practice:

IGE-UP-1	Purging Procedures for Non-domestic Gas Installations and Soundness Testing Procedures for Industrial and Commercial Gas Installations.
IGE-UP-2	Guidance for Installation of Gas Pipework Boosters and Compressors for Customers Premises.
BS. 6644	Installation of Gas Fired Hot Water Boilers of Rated Inputs between 60kW and 2 mW.
BS. 6880	Central Heating by Low Pressure Hot Water.
IM/11	Flues for Commercial and Industrial Gas Fired Boilers and Air Heaters.
IM/22	Installation Guide for High Efficiency (Condensing) Boilers (industrial and Commercial Appliances). **Note:** The **Ideal Concord Super** is a partially condensing boiler therefore the condensate drain should be run in accordance with IM/122.
BS. 5440:2	Specification for Installation of Ventilation for Gas Appliances.
CP 342.2	Centralised Hot Water Supply.

Health and Safety Document No. 635.

The Electricity at Work Regulations 1989.

Note: *All threaded gas and water connections must be sealed using appropriate jointing compound.*

INSTALLATION REQUIREMENTS

BOILER DESCRIPTION

Each boiler consists of;

(a) The insulated stainless steel casing with flue outlet, flue coupling point and condensate drain.

(b) The heat exchanger module(s).

(c) The module control pack.

(d) Wiring centre with high & low voltage wiring harnesses. and, in the case of multi-module boilers.

(e) Gas header - complete with individual module gas service taps and mains inlet gas tap.

(f) Flow and return water headers.

(g) Each boiler is supplied with instructions for installation and use.

The 50kW boiler is supplied with a module gas service tap only.

Each module is connected in parallel across the flow and return water headers, ensuring that water is flowing through all of the modules at all times.

The **Ideal Concord Super** range of boilers provides good load matching & sequence control by the following method:

As the load on the boiler decreases so the return water temperature increases.

Each module is fitted with an electronic thermostat capable of being set to within 0.5˚C. These thermostats sense the return water temperature.

Once the flow temperature reaches 82˚C (i.e. the return reaches 71˚C) the modules are set to switch off at intervals to maintain the flow at 82˚C ± 3˚C.

With basic controls the modules switch off from left to right and from top to bottom. Thus the top left module is always the first to go off and the bottom right the last. The standard wiring centre, on the side of the boiler, is the connection point for the mains supply, the low gas inlet pressure and low water pressure switches - provided for boiler protection. The centre also provides facilities for the wiring in (via voltage free connections) of remote indicators/alarms, for 'burner on', 'lock out' and 'overheat'. (Indicating that at least one module is in the signalled condition).

Facility is also provided for the connection of the 'Boiler Management System'. Additional controls such as water flow switch, programmer, energy management systems etc. may also be used.

MODULE DESCRIPTION

Each module can be sub-divided into 4 main elements:

(a) The heat exchanger, which consists of finned copper tubes expanded into cast iron end plates, and cast iron flow and return elbows (refer to Frame 15).

(b) The gas line, which supplies and regulates the gas flow to the burner (refer to Frame 17).

(c) The fan assembly, which draws gas (from the injector) and air, mixes them and supplies the mixture to the burner. (Refer to Frame 16).

(d) The electrical control assembly.

MODE OF OPERATION

The normal mode of operation of the boiler is preceded, in certain conditions, by a period in which the complete boiler casing is given a three volume air change. *The air change is an important safety feature of the European requirements, with which the boiler is designed to comply.*
The air change will occur whenever the boiler goes from a situation of no modules firing to a situation of one module firing. This includes morning start-up and those occasions of low load when the last module firing goes off on its thermostat (or external controls) and is called again.
The air change will NOT occur if one or more modules are firing and a further module is called.
The three volume air change period operates as follows, in the case of multi-module boilers: All the module fans are energised and run for a period of not less than 30 seconds. At the end of this period all the fans switch off.

After a delay of approximately 1 second, the fan of the module being called begins its 15 second pre-purge period. Refer to Frame 30.

In the case of single module boilers: only its own 15 second nominal prepurge period occurs.

When the electronic adjustable control thermostat calls for heat, the fan is switched on and purges the combustion chamber for 15 seconds. At the end of this time the ignition sequence starts; the control box delivers a spark from the ignition electrode to the burner and the gas valves are opened.

Gas is delivered, via the injector, to the distribution plate at the inlet to the fan. This pre-mixes the gas with the air which then passes from the fan through a multi-hole plate to the burner, where it is ignited. The flame is sensed via the ionization electrode and the controls keep the valves open until the thermostat is satisfied.

The module is protected against blockage of the burner, heat exchanger or flue, and against fan failure by the gas/air control. This senses the difference in pressure across the multi-hole plate and controls the gas injector pressure according to the amount of air flowing.

After combustion, the products flow past the finned copper tubes and through the gas distribution screen into the boiler casing. In doing so, heat is given up to the water flowing through the tubes.

TECHNICAL DATA

Table 1.

Boiler		50 V	100 V	150 V	200 V	250 V	300 V	150 VA	250 H	300 H
No. of modules		1	2	3	4	5	6	3	5	6
Heat output	kW	50	100	150	200	250	300	150	250	300
	Btu/h x 10^3	170.6	341.2	511.8	682.4	853.0	1023.6	511.8	853.0	1023.6
Heat input	kW	58.8	117.6	176.4	235.2	294.0	352.8	176.4	294.0	352.8
	Btu/h x 10^3	200.6	401.3	601.9	802.5	1003.1	1203.8	601.9	1003.1	1203.8
Gas rate	m^3/h	5.5	11.0	16.5	22.1	27.6	33.1	16.5	27.6	33.1
	$ft.^3$/h	195	389	584	779	973	1168	584	973	1168
Flue gas mass	g/s	25	50	75	100	125	150	75	125	150
volume*	l/s	27	55	82	110	137	164	82	137	164
at 120° C (248° F)	$ft.^3$/min	58	116	174	232	290	348	174	290	348
Required water	l/s	1.07	2.14	3.21	4.28	5.35	6.42	3.21	5.35	6.42
flow rate ± 10%	gal./min.	14.1	28.2	42.3	56.4	70.5	84.6	42.3	70.5	84.6
Hydraulic resistance		12.5 kN/m^2 (50 in.w.g.)								
Minimum static head**		2 m (6.5 ft.)								
Maximum static head		60.0 m (197 ft.) 6.0 bar (85 lb/in^2)								
Electricity supply		230 V ~ 50 Hz,								
Power consumption	W	90	180	270	360	450	540	270	450	540
Gas supply pressure †		20.0 mbar (8 in.w.g.)								
Boiler height	mm	782	1432	1912	1550	2060	2060	1550	1480	1480
(overall)	in.	30.8	56.4	75.3	61.0	81.1	81.1	61.0	58.3	58.3
Boiler width	mm	475	942	955	1425	1441	1441	1425	1817	1817
(overall)	in.	18.7	37.1	37.6	56.1	56.7	56.7	56.1	71.5	71.5
Boiler depth (overall)		698 mm (27.4 in.)								
Weight of casing	kg.	29.1	47.7	61.5	76.6	106.6	98.9	84.0	107.0	99.0
and insulation	lb.	64.1	105.2	135.5	168.8	235.0	218.0	185.0	235.0	218.0
Weight of	kg.	53	106	159	212	265	318	159	212	318
modules	lb.	116	232	348	464	580	696	348	580	696
Weight of gas &	kg.	---	34.0	53.6	59.4	89.4	94.3	53.4	92.2	96.7
water headers ‡	lb.	--	75	118	131	197	200	118	203	213
Water content	l.	4.5	11.9	20.7	26.2	37.7	44.5	21.7	39.7	44.5
boiler	gal.	1.0	2.6	4.6	5.9	8.3	9.9	4.9	8.8	9.9
Flow and return	mm	40	50	65	65	80	80	65	80	80
connection ††	in.	1½	2	2½	2½	3	3	2½	3	3
Gas connection	Rc	¾	1	1¼	1¼	1½	1½	1¼	1½	1½
	in. BSP	¾	1	1¼	1¼	1½	1½	1¼	1½	1½
Flue pipe size	mm	125	175	200	250	250	300	200	250	300
(Nominal bore) †††	in.	5	7	8	10	10	12	8	10	12
Flue socket size	mm	159	213	238	288	288	339	238	288	339
	in.	6¼	8⅜	9⅜	11⅜	11⅜	13⅜	9⅜	11⅜	13⅜
Injector size		7.3 mm (0.28 in.)								
Type of gas		Natural gas (G20) only								

Notes:

* Flue gas volumes are calculated from a calorific value of 38.4 MJ/m^3 (1,031 Btu/$ft.^3$) at 15°C and 1.013 bar - based on a CO_2 content of 9.0%.

** For further information on minimum head requirements refer to page 9.

‡ Total weights of all headers, fully assembled.

† The minimum gas supply pressure is with all modules firing.

†† Flange size; refer to BS. 4504.

††† For 150 VA, 250 V and 250 H models ONLY, a flue adaptor is supplied as standard.

TECHNICAL DATA

Table 2.

Boiler		350 V	400 V	450 V	500 V	550 V	600 V	450 H	500 H	550 H	600 H
No. of modules		7	8	9	10	11	12	9	10	11	12
Heat output	kW	350	400	450	500	550	600	450	500	550	600
	Btu/h x 10^3	1194	1365	1535	1706	1877	2047	1535	1706	1877	2047
Heat input	kW	411.6	470.4	592.2	588.0	648.8	705.6	529.2	588.0	646.8	705.6
	Btu/h x 10^3	1404	1605	1806	2006	2207	2407	1806	2006	2207	2407
Gas rate	m^3/hr	38.6	44.1	49.7	55.2	60.7	66.2	49.7	55.2	60.7	66.2
	$ft.^3$/hr	1363	1557	1752	1947	2143	2336	1752	1947	2143	2336
Flue gas mass	g/s	175	200	225	250	275	300	225	250	275	300
volume*	l/s	191	219	246	273	301	328	246	273	301	328
at 120° C (245° F)	$ft.^3$min.	406	464	522	580	638	696	552	580	638	696
Required water	l/s	7.49	8.56	9.63	10.70	11.77	12.84	9.63	10.70	11.77	12.84
flow rate ± 10%	gal./min.	98.7	112.8	126.9	141.0	155.1	169.2	126.9	141.0	155.1	169.2
Hydraulic resistance		12.5 kN/m^2 (50 in.w.g.)									
Minimum static head **		2 m (6.5 ft.)									
Maximum static head		60.0 m (197 ft.) 6.0 bar (85 lb/in^2)									
Electrical supply		230 V ~ 50 Hz,									
Power consumption	W	630	720	810	900	990	1080	810	900	990	1080
Gas supply pressure †		20.0 mbar (8 in.w.g.)									
Boiler height	mm	1618	1618	2144	2144	2144	2144	1467	1467	1467	1467
(overall)	in.	63.7	63.7	84.4	84.4	84.4	84.4	57.8	57.8	57.8	57.8
Boiler width	mm	1822	1822	1833	1833	1833	1833	2393	2393	2393	2393
(overall)	in.	71.7	71.7	72.2	72.2	72.2	72.2	94.2	94.2	94.2	94.2
Boiler depth (overall)		1350 mm (53.1 in.)									
Weight of casing	kg.	134	126	197	190	182	175	197	190	182	175
and insulation	lb.	295	278	435	418	402	386	435	418	402	386
Weight of	kg.	371	424	477	530	583	636	477	530	583	636
modules	lb.	818	935	1052	1168	1282	1402	1052	1168	1282	1402
Weight of gas &	kg.	260	263	311	313	315	318	298	300	302	304
water headers ‡	lb.	573	580	686	690	694	701	657	661	665	670
Water content	l.	63.3	68.1	97.6	102.4	107.2	112	92.6	97.4	102.2	107
boiler	gal.	14.1	15.1	21.6	22.7	23.9	24.9	20.5	21.6	22.7	23.7
Flow and return	mm	100	100	125	125	125	125	125	125	125	125
connection ††	in.	4.0	4.0	5.0	5.0	5.0	5.0	5.0	5.0	5.0	5.0
Gas connection	Rc	2	2	2	2	2	2	2	2	2	2
	in. BSP	2	2	2	2	2	2	2	2	2	2
Flue pipe size	mm	350	350	400	400	450	450	400	400	450	450
(Nominal bore) †††	in.	14	14	16	16	18	18	16	16	18	18
Flue socket size	mm	400	400	450	450	501	501	450	450	501	501
	in.	15¾	15¾	17¼	17¼	19¾	19¾	17¾	17¾	19¾	19¾
Injector size		7.3 mm (0.28 in.)									
Type of gas		Natural gas (G20) only									

1 RECOMMENDED BOILER-HOUSE CLEARANCES 50 - 300kW

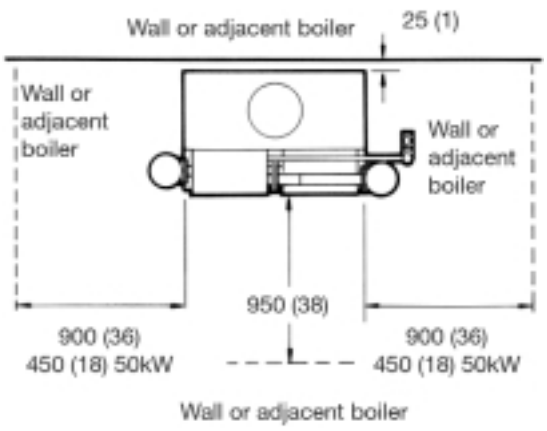

All dimensions in millimetres (inches)

2 RECOMMENDED BOILER-HOUSE CLEARANCES 350 - 600kW

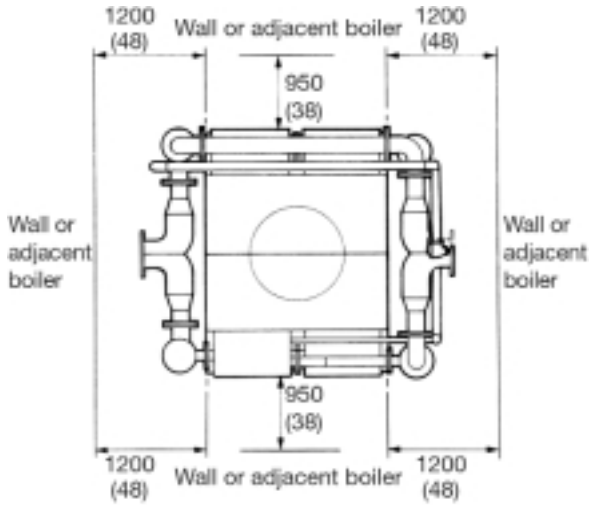

All dimensions in millimetres (inches)

The installation must also conform to current building regulations, any requirement of the local authority health and safety executive, gas region, insurance companies and the Health and Safety at Work Act 1974. All wiring must conform to I.E.E. (BS. 7671) regulations for the electrical equipment of buildings.

The boiler modules are very quiet in operation and no additional noise soundproofing is required.

LOCATION

The floor must be flat, level, and capable of supporting the weight of the WET boiler pipework. In addition concrete floors must be sealed. The siting of the boiler must be in accordance with the guidance given in BS. 6644 and with reference to minimum boiler-house clearances. Refer to Frames 1 & 2.

CONNECTION TO GAS SUPPLY

The gas installation MUST be in accordance with the requirements of the local gas region (refer also IM/16).
The gas supply must be capable of maintaining a minimum-pressure of 15.0 mbar (6 in.w.g.) at the inlet to the boiler, with all modules firing.
Gas consumption is given in Tables 1 & 2.
The boilers are for use with NATURAL GAS ONLY.

FLUE REQUIREMENTS

Open flue, induced draught and tan diluted systems may be used but must comply with the following basic requirements:

1 A draught diverter MUST NOT be fitted.

2. A draught stabiliser MUST be fitted to ail types of flue systems within 1 metre of the flue outlet and set to control the draught in the casing between neutral and 0.2 mbar (0.08 in.wg.) irrespective of flue height or number of modules firing. Refer to Frames 3 and 4 for further guidance.

3. ALL flue systems must be insulated and/or lined and impervious to acid condensate.
Prefabricated chimneys must have a 'U' value of no greater than 1.4 W/m^2 °C at 540°C (0.25 Btu/h ft.^{2}°F at 1000°F.)

4. Drainage must be provided at the base of the chimney or liner. All boiler casings are fitted with a condensate drain point - refer to Frame 14.

5. For fan diluted or induced draught systems, air flow/pressure switches MUST be fitted to protect against fan failure. Switches should be set to open if the air flow reduces by more than 15%.

6. Flue products must not be allowed to enter the boiler house or adjacent buildings.

7. Refer also to BS. 6644 and to the British Gas Publication IM/11 - 'Flues for Commercial and Industrial Gas Fired Boilers and Air Heaters' and IM/22 for further guidance.

AIR SUPPLY

Detailed recommendations for air supply are given in BS. 5440:2 and BS. 6644 which MUST be consulted before proceeding.

Contamination of the air supply from any external source must be avoided, with particular reference to dust, insulation debris and flue products. Concrete floors must be sealed.
If any work is to be carried out in the boiler-house which is likely to generate dust (e.g. structural alterations or the lagging of pipework) it is recommended that the boiler is shut down and the modules covered with a dust sheet, otherwise the boiler will require cleaning and servicing.

1. In particular, the contamination of the air supply with chlorides must be avoided as they will cause the deterioration of the aluminium fan impellor.

2. The boiler-house requires ventilation openings at BOTH high and low levels, direct from the outside. Allowances MUST be made for stabiliser dilution in all cases.

3. Mechanically forced ventilation systems must include provision for boiler shut down in the event of tan failure.

4. High speed air streams within the boiler house must be avoided.

5. Extraction mounted ventilation fans alone are NOT permitted.

6. The minimum effective areas of the permanent air vents direct from the outside by natural ventilation are as follows:

Low level- 540 cm^2 plus 4.5 cm^2/kW in excess of 60kW total rated input.

High level- 270 cm^2 plus 2.25 cm^2/kW in excess of 60kW total rated input.

3 APPLICATION OF DRAUGHT STABILISER - SINGLE BOILER INSTALLATION

INDUCED DRAUGHT

Note: The discharge from both types of system MUST not allow recirculation of combustion products into the boiler-house or adjacent buildings.

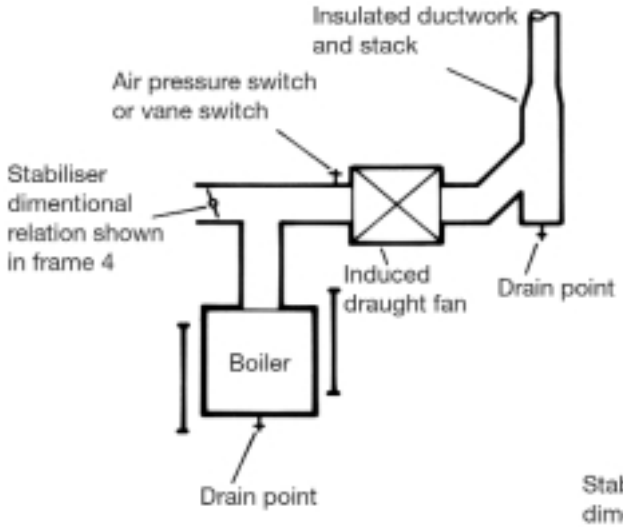

FAN DILUTED FLUE (FDF) SYSTEM

Note: Air intake and discharge should be on the same outside wall face. Design must comply with British Gas requirements -refer page 5 and Publication IM/11.

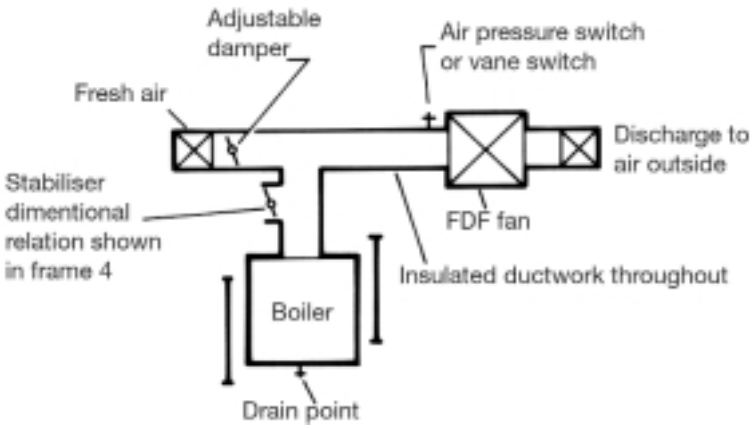

All dimensions in millimetres (inches)

4 FLUEING - GENERAL GUIDANCE BOILER INSTALLATION

Notes:
The draught at the boiler casing must be controlled between neutral and 0.2 mbar (0.08 in. w.g.) negative irrespective of the number of modules firing.
The draught stabiliser must be fitted within 1 metre of the boiler casing.

To achieve the minimum neutral draught condition a vertical flue length of 2 metres is needed plus whatever extra height is necessary to overcome the resistance of any bend or ductwork between the boiler casing and the vertical flue.

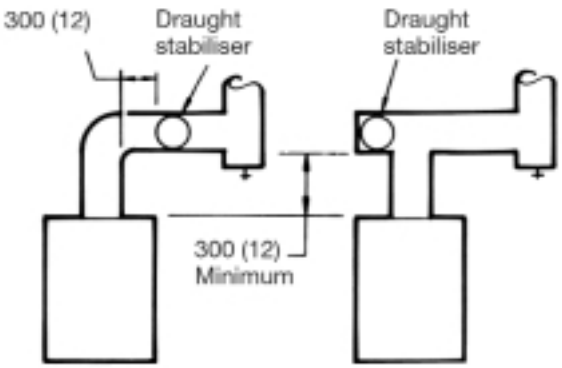

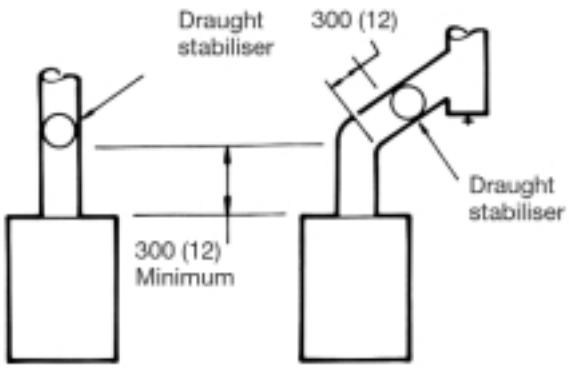

Contact should be made with the Customer Care department of Caradon Heating for further advice and information on this subject. Tel: 01482 498376

All dimensions in millimetres (inches)

5 BOILER DIMENSIONS 50kW - 150kW Models

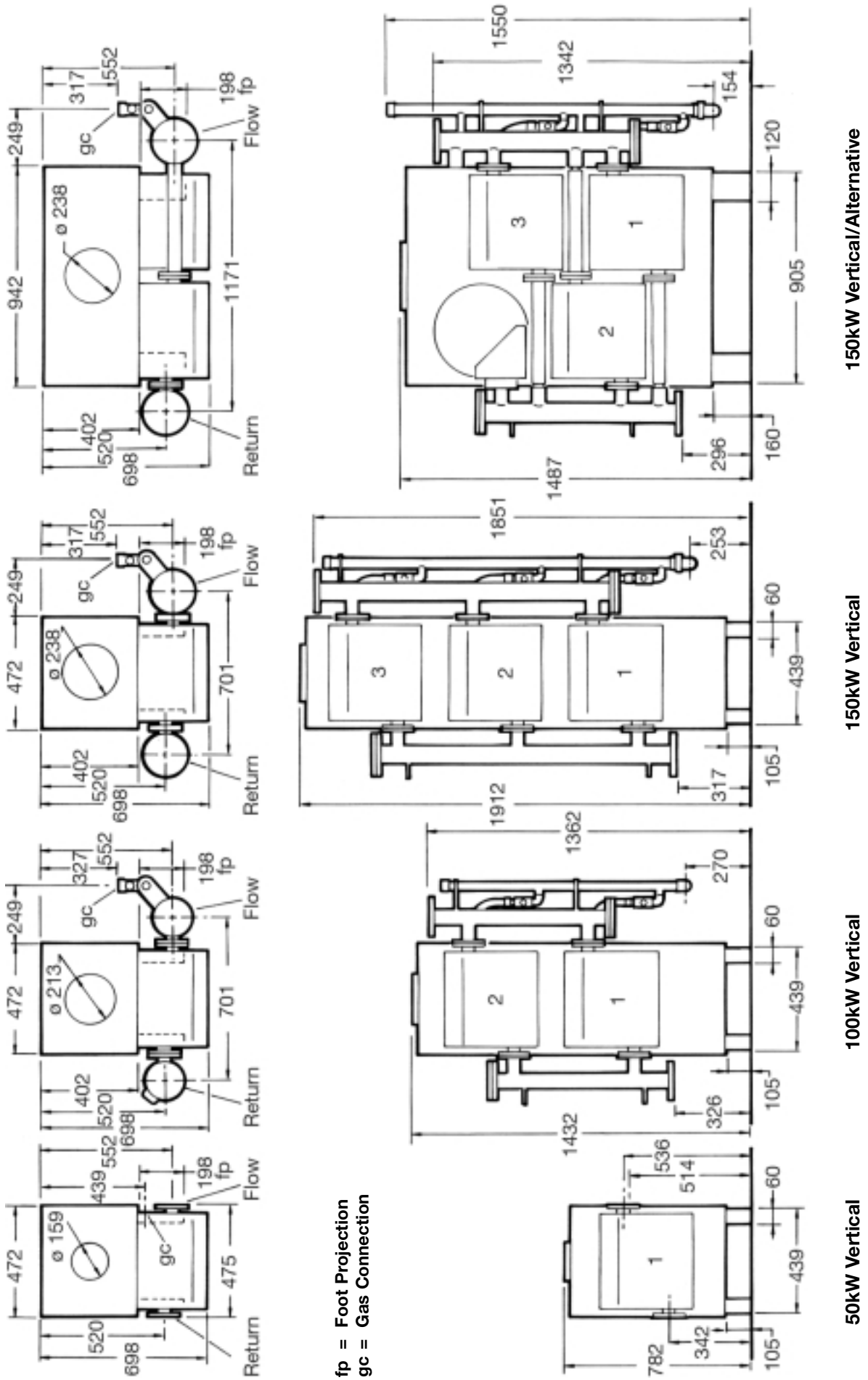

6 BOILER DIMENSIONS 200kW - 300kW Models

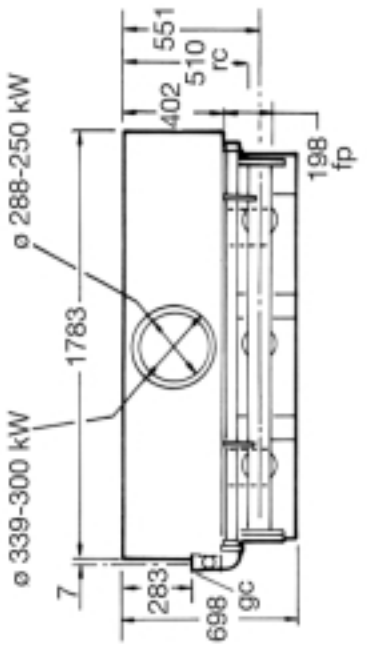

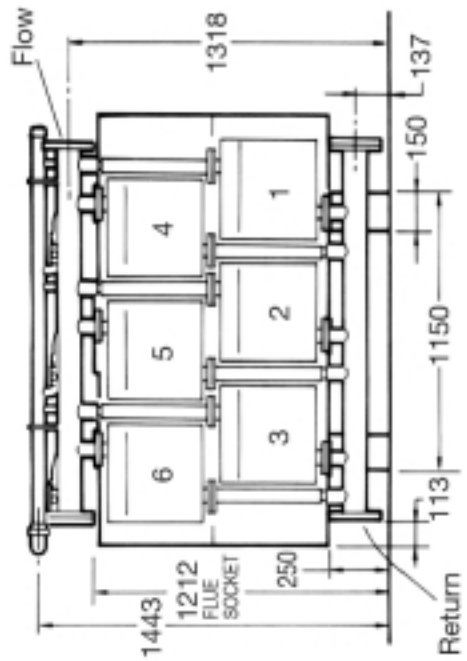

250kW / 300kW Horizontal

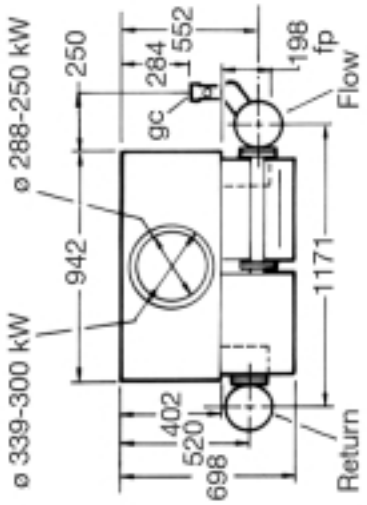

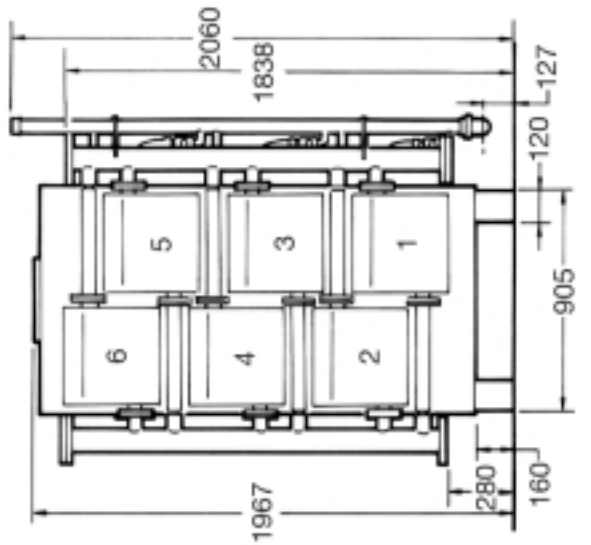

250kW / 300kW Vertical

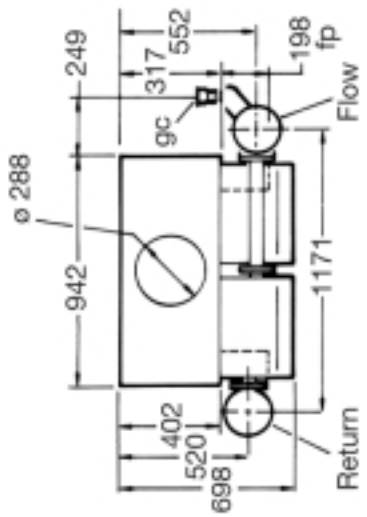

fp = Foot Projection
gc = Gas Connection
rc = Return Connection

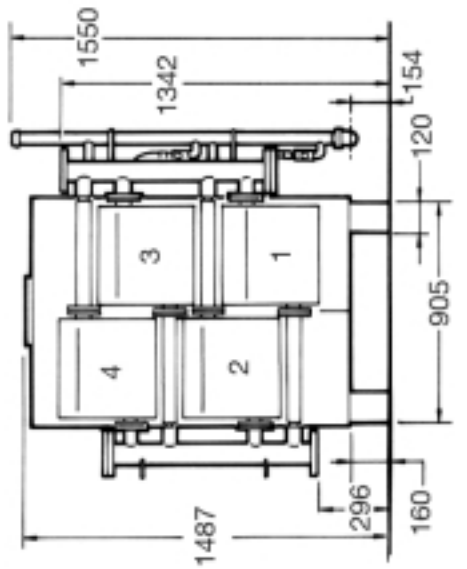

200kW Vertical

All dimensions in millimetres (inches)

7 BOILER DIMENSIONS 350kW - 600kW Models

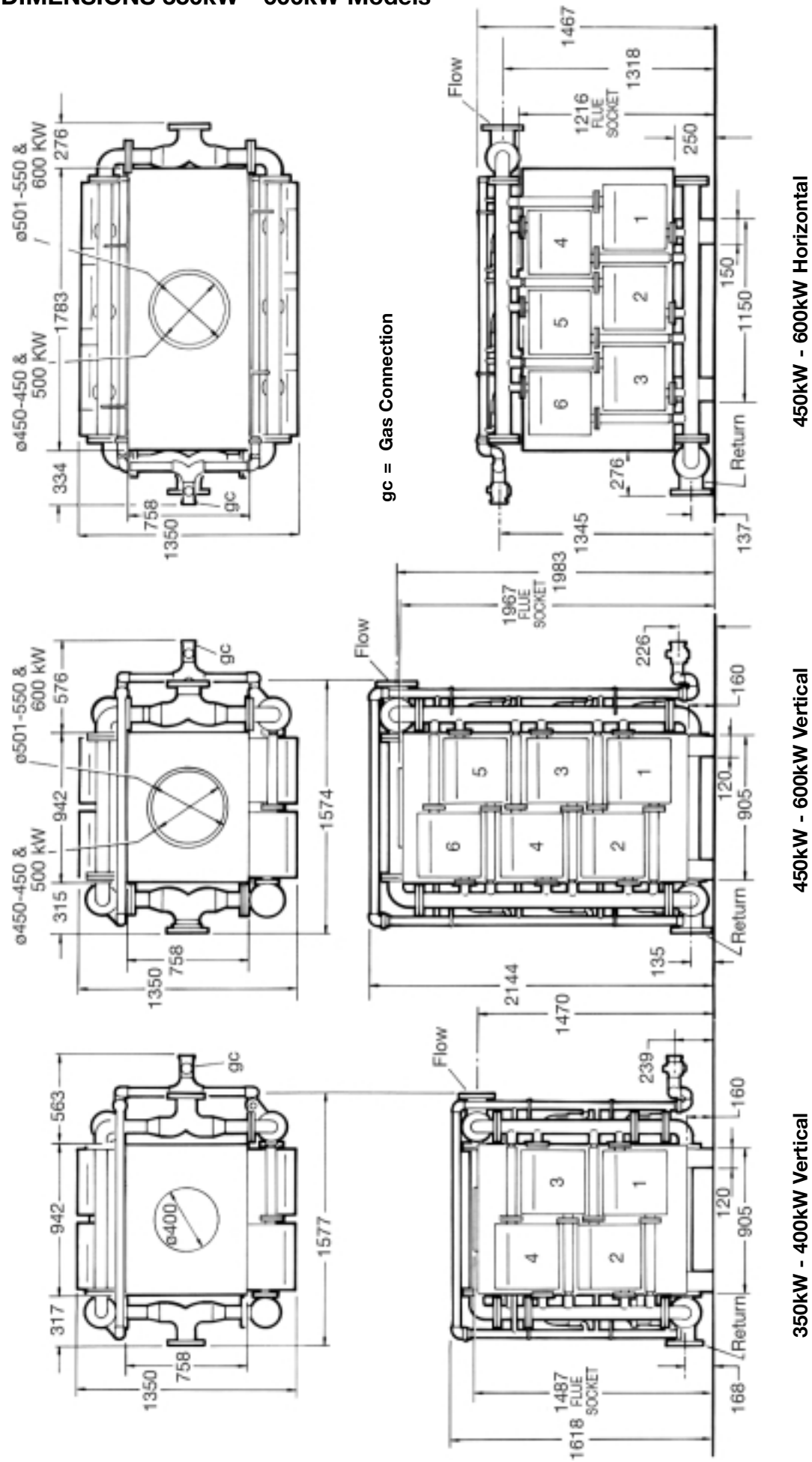

All dimensions in millimetres (inches)

8 SITE ASSEMBLY - 600kW Vertical boiler

Note.

1. To aid the assembly procedure, on the flow & return manifolds and the flow & return spools, theflanges are left loose for site welding.
2. The double M/F elbows (16) are to enable ease of fit and squareness.

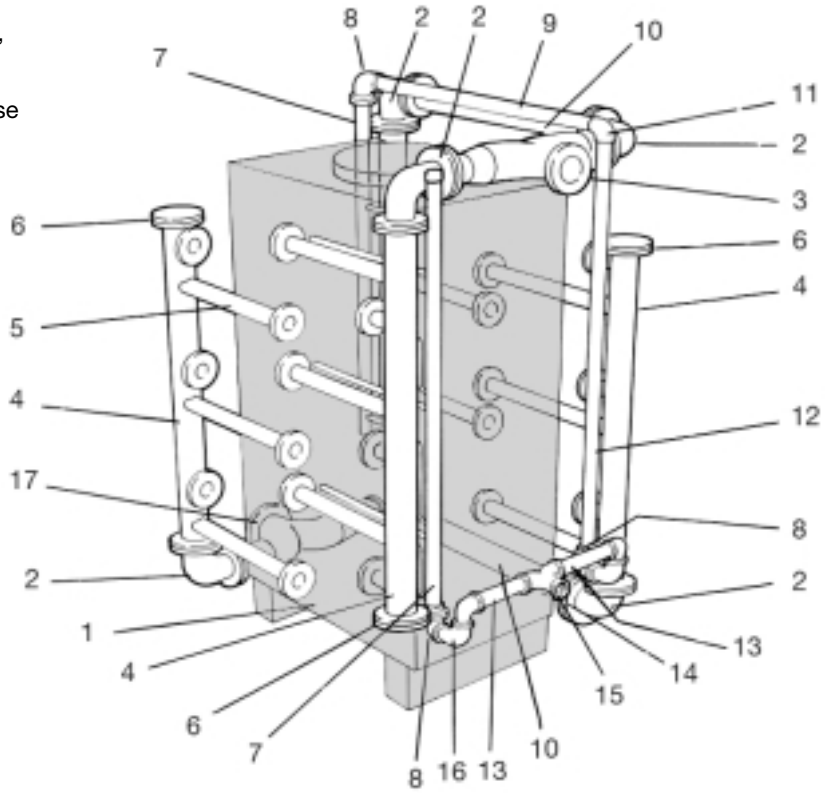

LEGEND

1. Insulated boiler casing (c/w feet).
2. 80 nom. bore elbow.
3. Flow manifold (long).
4. Flow and return headers.
5. Flexible bellows unit.
6. Blank flange.
7. Gas header complete with gas cocks.
8. Rc 1½ union elbows.
9. Space nipple.
10. Flow and return spools.
11. Rc1½ elbow.
12. Space nipple.
13. Short space nipple.
14. Main gas cock (not shown).
15. Rc 2 twin elbow (with two hex bushes).
16. 1½ M/F elbow.
17. Return manifold (short).

9 SITE ASSEMBLY - 600kW Horizontal boiler

Note.

1. To aid the assembly procedure, on the flow & return manifolds and the flow & return spools, the flanges are left loose for site welding.
2. The double M/F elbows (12) are to enable ease of fit and squareness.

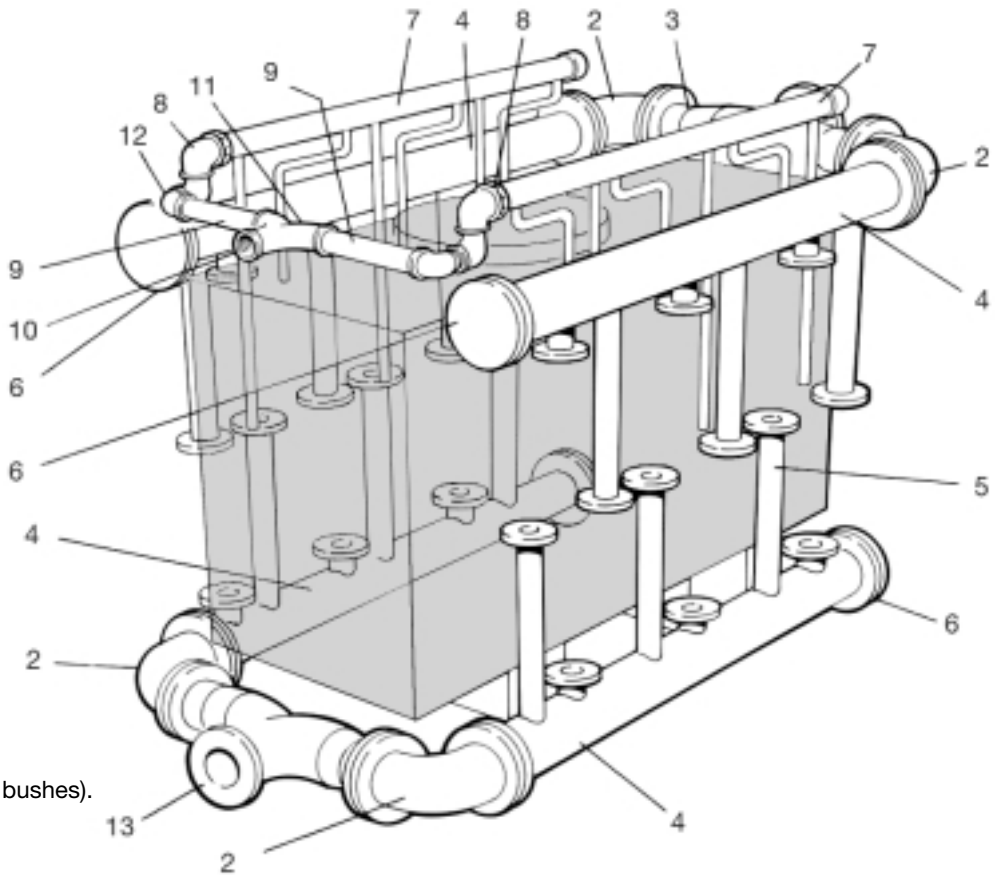

LEGEND

1. Insulated boiler casing (c/w feet).
2. 125 nom. bore elbow.
3. Flow manifold (long).
4. Flow and return headers.
5. Flexible bellows unit.
6. Blank flange.
7. Gas header complete with gas cocks.
8. Rc 1½ union elbows.
9. Short space nipple.
10. Main gas cock (not shown).
11. Rc 2 twin elbow (with two hex bushes).
12. 1½ M/F elbow.
13. Return manifold (short).

7. The minimum air requirements by mechanical ventilation are as follows:

Table 3 - MECHANICAL VENTILATION FLOW RATES.

Type of boiler	Flow rate per 1000kW total rated heat input	
	Inlet air (combustion ventilation)	Extract air (ventilation)
Forced/induced draught boilers	0.90 m^3/s	0.60 m^3/s

A purpose designed flueing ventilation system based solely on a high level permanent opening to an otherwise sealed boiler-house or compartment may be used, provided that specialist advice is taken, and that the combustion air and ventilation requirements of the boiler is provided in line with BS. 6644. In addition to this, the boiler house temperature must be prevented from exceeding 32˚C.

WATER CIRCULATION SYSTEM

DESIGN REQUIREMENTS

Ideal Concord Super gas boilers are intended for use in conjunction with FULLY PUMPED, OPEN VENTED or PRESSURISED systems - subject to the requirements detailed below. They are NOT suitable for use on gravity circulation systems.

Water Flow Rate

1.07 l/s (14.1 gal/min) ± 10% through each module.

Thus a six module boiler requires 6.42 l/s (84.6 gal/min) volume flow rate. Refer to Tables 1 & 2 for other boilers.

Note. Failure to maintain this flow rate will result in operation of the module overheat cut off device.

The boilers are suitable for operation when connected to systems requiring lower flow rates than those quoted above and to systems where the volume flow varies with load, PROVIDED they are installed in accordance with Frame 10. Any other method of installation should be discussed with CARADON HEATING Ltd. before proceeding.

Hydraulic Resistance - refer Graph 1

When operating at the correct volume flow rate given above, the hydraulic resistance of all Ideal Concord Super boilers is 12.5 kN/m^2 (50 in.w.g.).

Pump Over-run

A pump over-run time of 30 seconds minimum must be allowed for on plant shutdown.

Maximum Static Head

60.Om (197 ft.), i.e. maximum operating pressure 6.0 bar (85 lb/in^2).

Minimum Static Head

Minimum static head requirements for open vented systems must comply with boiler design characteristics, pump manufacturer's requirements and the requirements of the Health and Safety executive Publication PM5.

In order to comply with the above, a minimum static head of 2m (6.5 ft), i.e. 0.20 bar (3 lb/in^2) will be adequate under most operating conditions, measured either from the highest circulating point of the system or from the boiler when the boiler house is roof mounted.

Note. In some cases, pump manufacturers will require a head as high as 12m (40ft). This must be allowed for and the minimum head increased accordingly. Refer to Frame 10 for further clarification.

Safety Valve

A safety valve must be sized and fitted in accordance with BS. 6644. The valve should be set at 0.7 bar (10 lb/in 2) above the available static head of water over the boiler.

The maximum safety valve setting is 0.7 bar (10 lb/in^2) above the maximum design operating head of 6.0 bar (85 lb/in^2), i.e. 6.7 bar (95 lb/in^2).

Table 4 - VENT, COLD FEED

The open vent and cold feed pipe sizes must comply with BS. 6644 and must be of the following minimum size.

Boiler	Cold feed nominal dia.	Open vent nominal dia.
50 V	19 mm	25 mm
100 V, 150 V	25 mm	32 mm
200 V, 250 V, 300 V	32 mm	38 mm
150 VA	25 mm	32 mm
250 H, 300 H	32 mm	38 mm
350 V - 600 V	38 mm	50 mm
450 H - 600 H	38 mm	50 mm

Drain

The drain valve must comply with BS. 2879 and be operated with a removable key.

Pressure Gauge

The water pressure gauge and temperature gauge must the fitted in accordance with BS. 6644.

Water flow switch

A water flow switch must be fitted to protect the boiler from pump failure.

Graph 1 - HYDRAULIC RESISTANCE

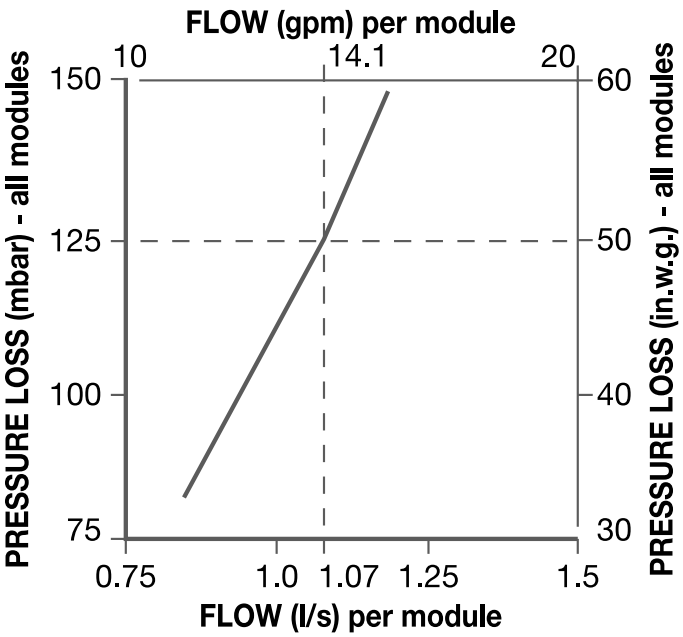

GENERAL GUIDANCE ON APPLICATIONS

Frame 10 is intended to provide basic information only on the application of the **Ideal Concord Super** boiler. British Gas approval has not been sought in the matter.

It is impossible to cover all applications and installers are recommended to contact Caradon Heating Ltd. if advice on a specific application is required. It is essential that the water flow rates given in Tables 1 & 2 be maintained within the limits stated - therefore any compensating devices must not be connected to **Ideal Concord Super** boilers directly but may be used in conjunction with a mixing header. The mixing header must be sized at least one pipe size larger than the boiler flow and return manifold size. This will avoid hydraulic interference between the boiler primary pump and system zone pumps. The use of a mixing header means that compensating controls can be used to operate mixing valves on a variable temperature circuit, without affecting the water flow rate through the boiler.

10 GUIDE TO MINIMUM REQUIREMENTS FOR OPEN VENT - Feed/expansion tank height and boiler primary circuit.

1. Roof top or single storey applications

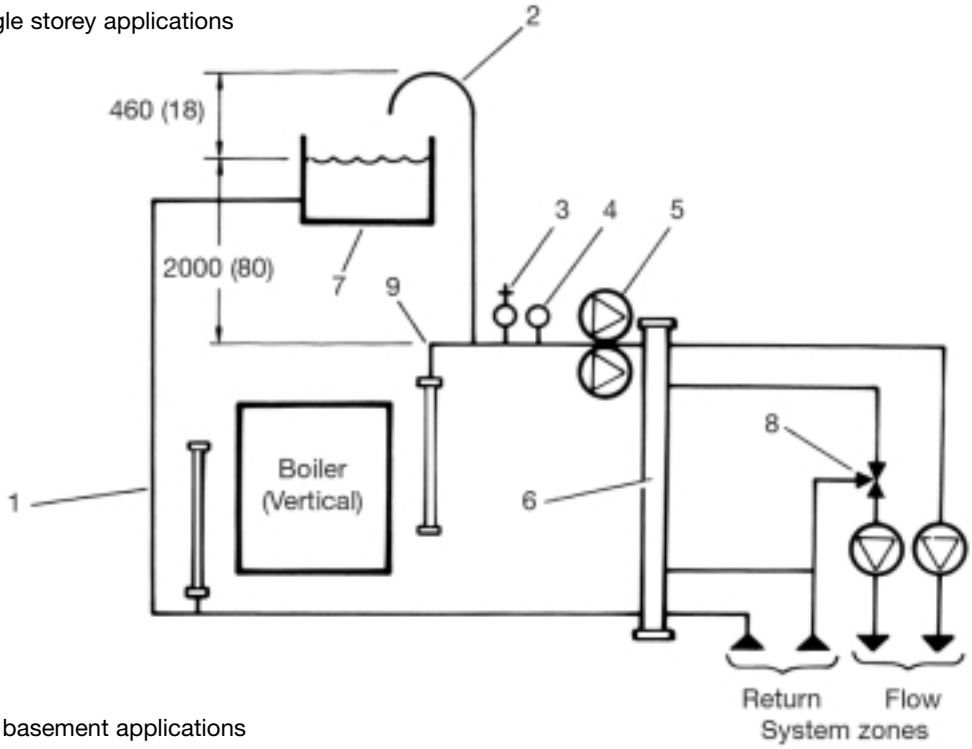

2. Ground floor or basement applications

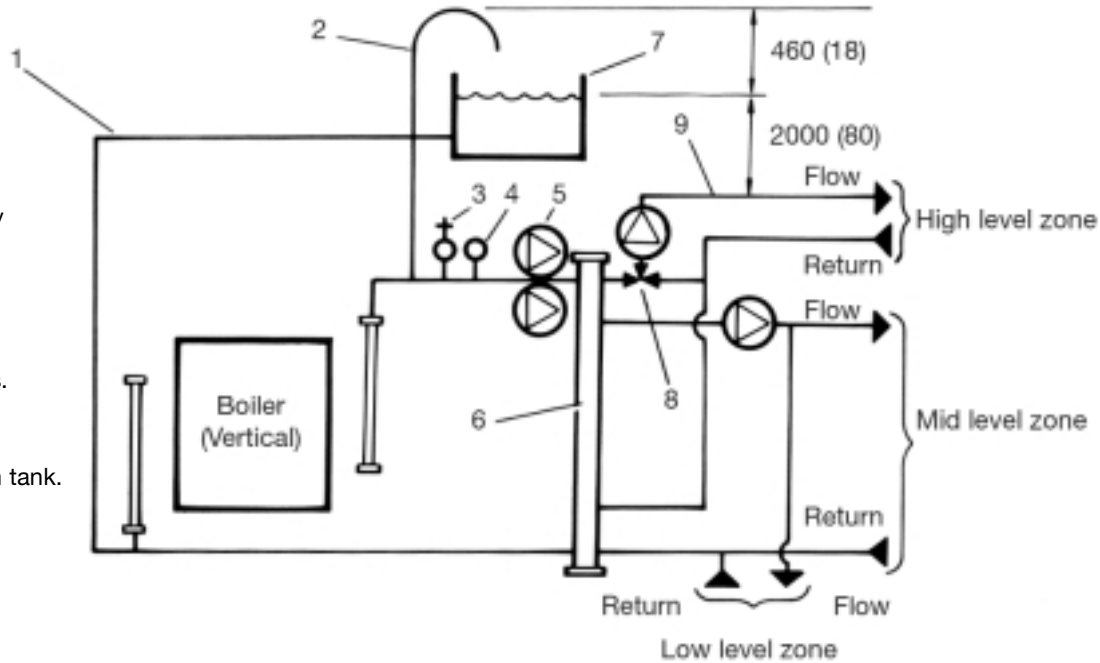

LEGEND

1. Cold Feed (sizes MUST comply with BS. 6644).
2. Open vent.
3. Safety valve.
4. Water flow switch.
5. Dual primary pumps.
6. Mixing header - see note above.
7. Feed and expansion tank.
8. Mixing valve.
9. Highest point in the system.

All dimensions in millimetres (inches)

Frame 10 shows how constant and variable temperature circuits can be used on low and high head applications. The following points should be noted:

1. The recommended positions of the cold feed and open vent are shown. Sizes should comply with BS. 6644. if isolating valves are to be fitted in the flow and return pipes of the boiler they must not isolate the boiler from the open vent, safety valve or cold feed.
2. **The minimum tank height** shown is measured from the highest point of the system and must be increased, if necessary, to comply with pump manufacturers' requirements.
3. **The open vent height** above tank water level cannot be guaranteed adequate in all circumstances and does not take into account any instantaneous changes in head brought about by ancillary equipment operating.
4. **Water flow switch** is shown in its recommended position. It MUST NOT be located on the mixing header where operation of zone pumps can cause reduction in flow.
5. **Production of condensate:** When operating normally and the design return temperature has reached 71˚C., the boilers produce no condensate. At lower temperatures the amount of condensate increases. It is normal for condensate to be produced as the boiler heats up from cold and, provided the time taken for the return to reach 71˚C. is not excessive, no harm will result.
   If, however, large quantities of condensate are produced for long periods, this can adversely affect burner performance and cause the control box to lockout. If the water content of a system is very large it is advisable to switch on individual zones from cold, in sequence, with a time delay sufficient to allow the boiler return temperature to reach 55˚C. as quickly as possible.

6. Water treatment for hot water and heating boilers.
There is a basic need to treat the water contained in all heating and indirect water systems, particularly open vented systems. This may be regarded as an essential requirement for systems incorporating **Ideal Concord Super** boilers.
It is assumed, incorrectly, that because boilers are operating in conjunction with what is apparently a closed circuit, an open vented system will not, under normal circumstances, allow damage or loss of efficiency due to hardness salts and corrosion once the initial charge of water has been heated up a few times.
This is not the case. Open vented systems are not completely sealed off from the atmosphere (if proper venting and expansion of system water is to be achieved). The same tank is used to fill the system with water and it is through the cold feed pipe that system water expands into the tank as the system heats up.
Conversely, as the system cools, water is drawn back from the tank into the system, together with a quantity of dissolved oxygen. Also there will be evaporation losses from the surface of the tank which, depending on ambient temperature, may be high enough to evaporate a large portion of the system water capacity over a full heating season.
For these reasons, even if the system is completely free from leaks, there will always be corrosion or salt deposition within a heating or hot water system, irrespective of water characteristic unless the initial fill water from the mains is treated.
1mm of lime reduces the heat transfer from metal to water by 10%.

Lime deposition can also cause noises from the boiler body or even premature failure. Corrosion and the formation of black iron oxide sludge will ultimately result in premature radiator and pump failure.

Existing systems and, where necessary, new systems should be thoroughly cleaned prior to the use of a stable inhibitor, which does not require continual topping up to combat the effects of hardness salts and corrosion on the heat exchangers of the boiler and associated systems.

Caradon Ideal Ltd., advise contact directly with specialists on water treatment, such as:

Fernox Manufacturing Co. Ltd.,
Britannica Works, Clavering,
Essex, CB11 4QZ
Tel. 01799 550 811

or

Sentinel Division, Grace Dearborn Ltd.,
Widnes, Cheshire, WA8 8UD
Tel. 0151 424 5351.

ELECTRICAL SUPPLY

230 V ~ 50 Hz. Consumption: 90 W per module (excluding remote alarms etc.)

Note. *Extemal wiring and any installer-supplied remote warning lights MUST be in accordance with the I.E.E. (BS. 7671) regulations and any local regulations which apply.*

The method of connection to the mains supply should facilitate complete electrical isolation of the boiler.

Connection should be made via a fused double pole switch or fused spur box, serving the boiler only, and incorporating contacts with a separation of at least 3 mm in all poles. The point of connection should be readily accessible and adjacent to the boiler.

The length of the power supply conductors between the cable anchorage and the terminals must be such that the current conductors become taut before the earth conductor, if the cable slips out of the cable anchorage.

The water flow switch and any other overriding safety devices should be wired in series with the isolation mains supply to the boiler.

12 WIRING FOR MULTI-MODULE BOILERS & SINGLE MODULE BOILERS FITTED WITH A WIRING CENTRE

For boilers larger than 300kW

Two wiring centres, as shown in Frame 12, are supplied fitted one each side of the boiler case.

It is important to ensure that the electrical wiring takes this factor into account.

Each wiring centre can accommodate up to six modules.

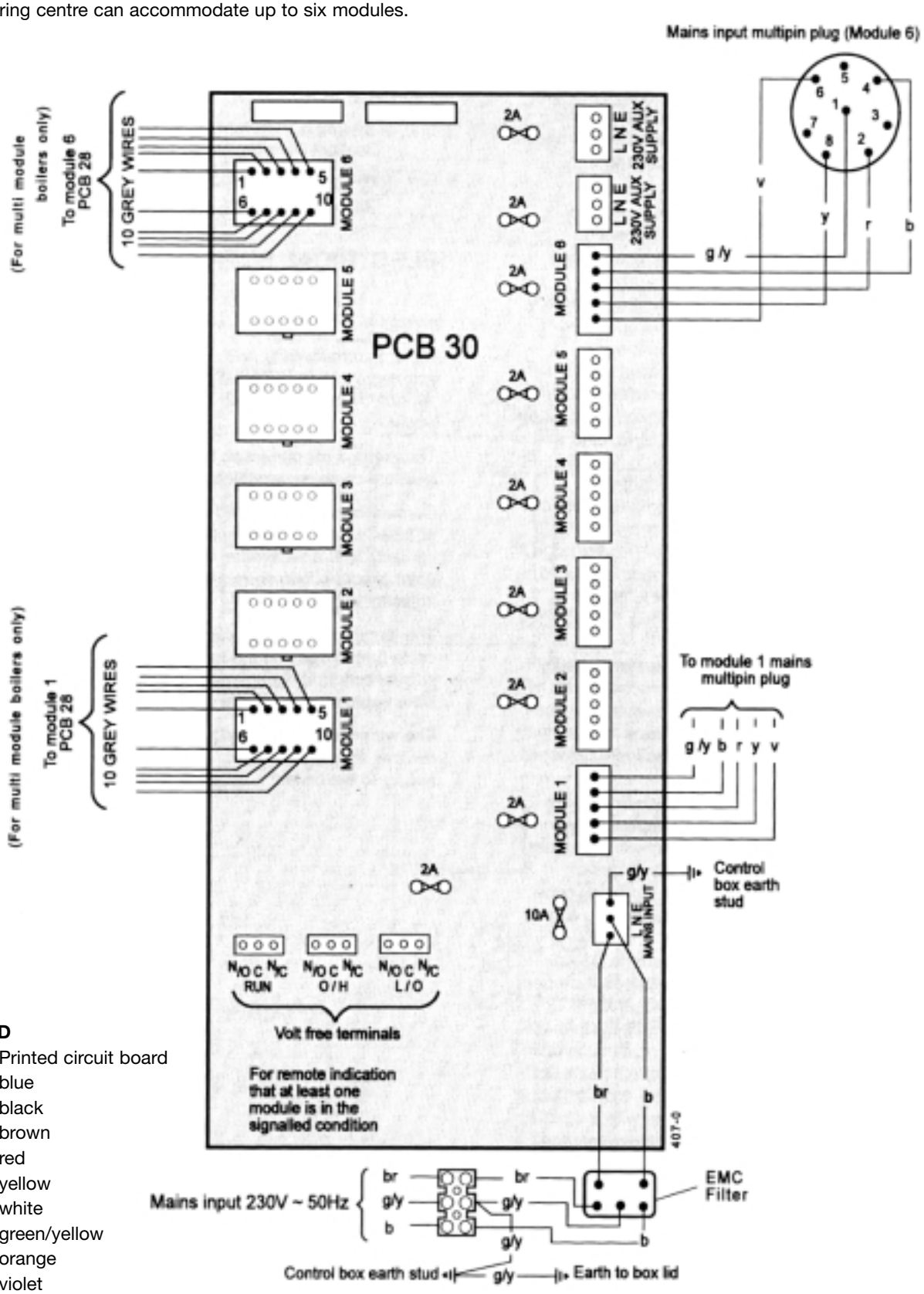

LEGEND

PCB - Printed circuit board
b - blue
bk - black
br - brown
r - red
y - yellow
w - white
g/y - green/yellow
or - orange
v - violet
pk - pink

13 50kW MODULE WIRING

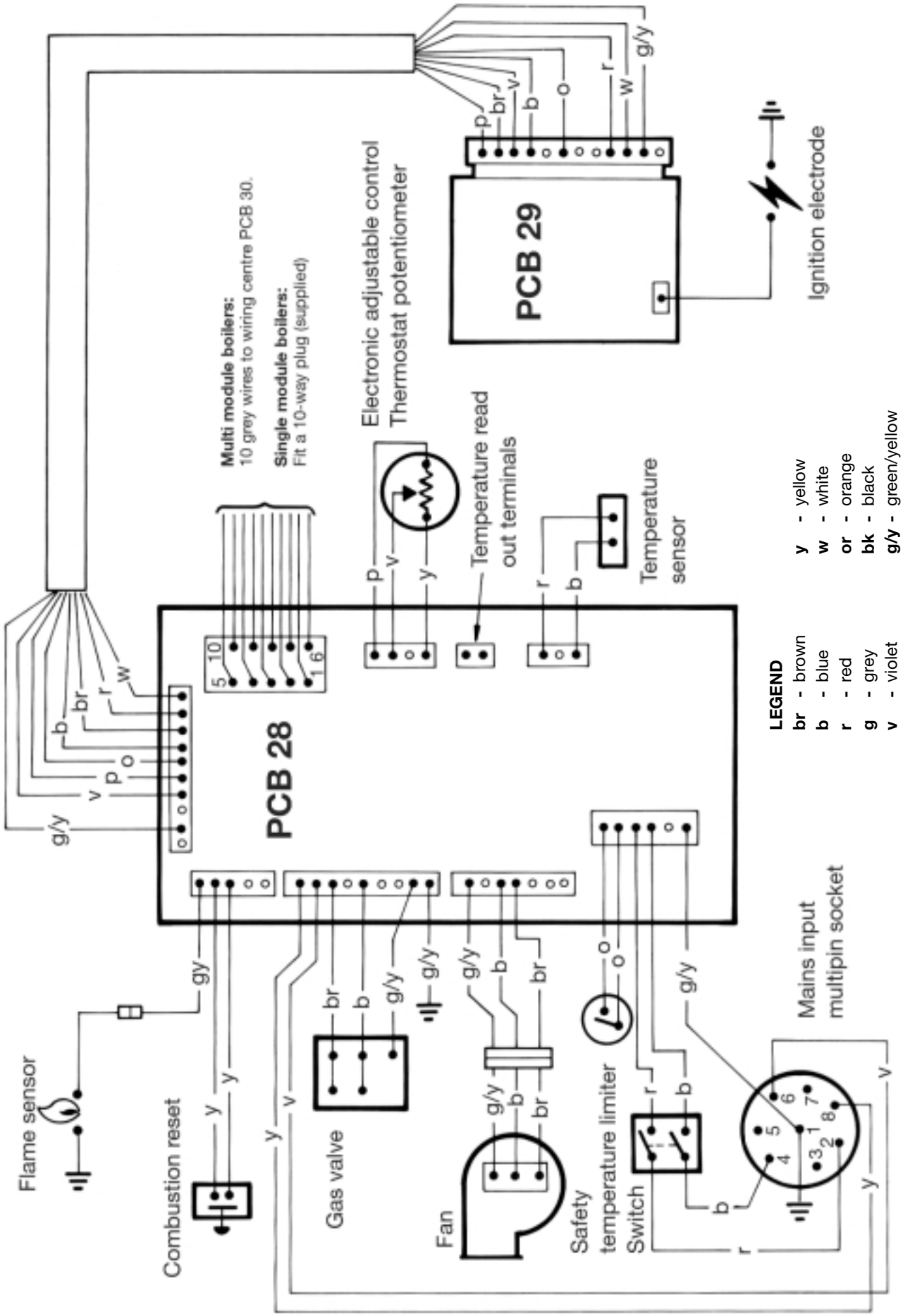

ELECTRICAL CONNECTIONS

PACKAGING

The boiler casing is supplied complete with insulation and feet, strapped to a packaging base and shrink-wrapped. Boilers up to and including 150kW will have their water and gas headers packed and shrink-wrapped with the casing. Boilers of 200kW and above will have their water and gas headers supplied on a pallet, shrink-wrapped. The water header bellows units, flanges, gaskets etc., will be packed in cartons in the bottom of the casing. The modules are supplied individually packed on a packaging base.

FOUNDATION

An insulated foundation is NOT necessary, as the bottom of the boiler casing will not exceed a temperature of 80˚C. (176˚F.).

The foundation MUST be flat and level, fireproof, dust free and capable of supporting the weight of the WET boiler.

CASING AND DRAIN CONNECTION

A 22 mm copper street elbow is supplied in the water header hardware pack, for connection to the casing drain point. This elbow can be fitted in any direction and the compression nut tightened. A suitable drain should be connected to the elbow. Refer to Frame 14.

Note. Condensation will only occur on warming up, when the return water temperature is below 55˚C. (131˚F.) - the water dew point.

The boiler casing can now be placed in position.

N.B. EXTREME CARE MUST BE TAKEN WHEN HANDLING THE CASING, WHICH IS FITTED WITH AN ALUMINIUM-FACED, INSULATING CLADDING. THIS CLADDING CAN BE KEPT CLEAN BY WIPING WITH A DAMP CLOTH.

ASSEMBLING THE MODULE AND WATER HEADERS TO THE BOILER CASING (refer Frames 8, 9 & 14).

WARNING:

CRACKING MAY OCCUR IF THE FLOW AND RETURN MODULE CASTINGS ARE OVER-STRESSED.

The following procedure is to be adopted:-

1. Ensuring all cables are held clear and with the module cover removed, fit the module(s) to the casing but do NOT tighten the four fixing nuts.
2. **For boilers over 150kW ONLY:**
   Screw the flanged bellows unit into the internally threaded branches of the water headers, using a wrench on the hexagon at the end of the bellows to tighten in position. When tight, the flange on the bellows should finish approximately 470 mm (18 1/2 in.) away from the fixed flanges, with the flange holes in a vertical and horizontal attitude - refer frame 14.

UNDER NO CIRCUMSTANCES MUST THE FLANGE OR BELLOWS BE USED FOR TIGHTENING

3. Secure the flow and return water headers to the modules (rigid flanges first) using the gaskets and screws provided, and taking adequate precaution to support the headers during assembly.

For 150kW ALTERNATIVE and 250kW V boilers only

Ensure that the flange support bracket is fitted to the water header and module blanking plate.

Note: Care should be taken to avoid damage to the bellows units whilst tightening the screws securing the bellow flanges.

GAS HEADERS 100kWA 50kW boilers only:

Remove the adaptors from the flexible gas hoses and screw them to the elbows on the individual modules.

Offer up the gas header by lowering over the projecting studs on the water flow header so that the gas inlet pressure test point is at the top. Fasten with the nuts and washers provided.

Assemble the flexible hoses to the gas header and the individual modules, ensuring all connections are tight.

150kW A and boilers over 150kW

Remove the adaptors from the short flexible gas hoses and one of the adaptors from the long flexible gas hoses. Then assemble them to the elbows on the individual modules. Remove the other adaptors from each of the long flexible gas hoses and fix them to the appropriate cocks on the gas header. (horizontal cocks on vertical models and vertical cocks on horizontal models). Then screw the long flexible gas hoses back onto the adaptors.

Screw the short flexible gas hoses to the appropriate gas cocks on the gas header (vertical cocks on vertical models and horizontal cocks in horizontal models).

Offer up the gas header so that it locates over the projecting studs on the water flow header and the gas inlet pressure test point is at the right hand end (horizontal boilers) or at the top (vertical boilers). Fasten with the nuts and washers provided.

Assemble the flexible gas hoses to the adaptors ensuring all connections are tight.

ELECTRICAL CONNECTIONS (continued)

CONNECTING BOILERS TO THE FLUE SYSTEM

Details of the flue design are in Frames 3 and 4. Boiler socket and flue pipe sizes are indicated by Tables 1 & 2.

WATER CONNECTIONS AND PRESSURES

Refer Installation Requirements

All service pipework linking the flow and return headers must be adequately supported, so that no strain is imposed upon them.

Allowance must be made for any additional service pipework expansion.

Provision is made for draining the boiler by an adaptor on the model 50V, a tapped flange on models 250/300H and 450/600H, and tappings in the water headers of other models.

Note. Care should be taken when fitting the adaptor or tapped flanges to ensure that the drain tapping is at the underside or lowest point respectively.

Additional drain points may also be required at the lowest points in the system.

A safety valve MUST be fitted.

The valve should be set at 0.7 bar (10 lb/in^2) ABOVE the available static head of water over the boiler, or the design operating pressure of the system - whichever applies.

It isolating valves are fitted in the flow and return pipes to the boiler they must NOT isolate the boiler from the open vent safety valve or cold feed.

The maximum safety valve setting is 0.7 bar (10 lb/in^2) above the maximum design operating head, or pressure of the boiler - 6.0 bar (85 lb/in^2).

ELECTRICAL CONNECTIONS (refer Frames 12 & 13)

a) Each module

Undo the two M4 screws on the right hand side of the control box and swing the front control panel out.

b) 50kw single module boiler only:

Fit the prewired low voltage 10-way plug (supplied in the hardware pack) into the socket at the top RH corner of Board No. 28. Note that it will fit only one way round, with the clip to the outside. Do not change or remove the factory-fitted link wires. Refer to Page 15, Frame 13 for mains connections details.

c) All multi-module boilers:

Pass the low voltage 10-way plug through the grommetted hole in the rear control panel and fasten it to its socket on Board No.28. Note that it will fit only one way round, with the clip to the outside. Secure the wires to the 3 cable clips on the control panel support bracket, ensuring that the wires are not trapped by the clip. Connect the module mains plug. Repeat for other modules.

Undo the four M4 screws and lift off the cover over Board No. 30 on the boiler casing fight hand side.

Feed the mains incoming wire through the bottom cable clamp. Connect the live, neutral and earth wires to the terminal strip on the bottom.

The water flow switch and any other over-riding safety devices should be wired in series with the isolation mains supply to the boiler.
Secure the cable using the cable clamp and refit the board cover.

All boiler sizes

Finally tighten the four brass fixing nuts on each module and fit the module casings, securing them by the two M6 screws.

14 BOILER ASSEMBLY - Exploded view (300kW Vertical boiler shown)

LEGEND

1. Flue sampling point.
2. Wiring Centre.
3. Water header.
4. Gas pressure test point.
5. 50kW module.
6. Module cover.

Note.

M12 flange bolts must be fitted pointing away from the module for the outer connections and pointing towards the module for the inner connections.

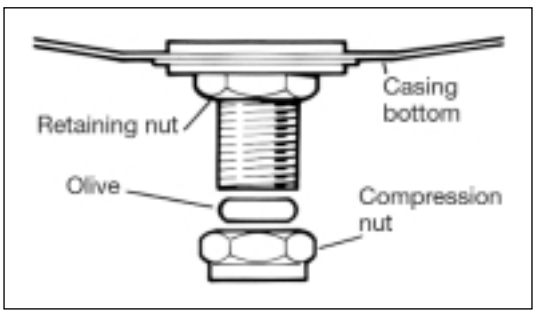

DETAIL OF DRAIN ASSEMBLY

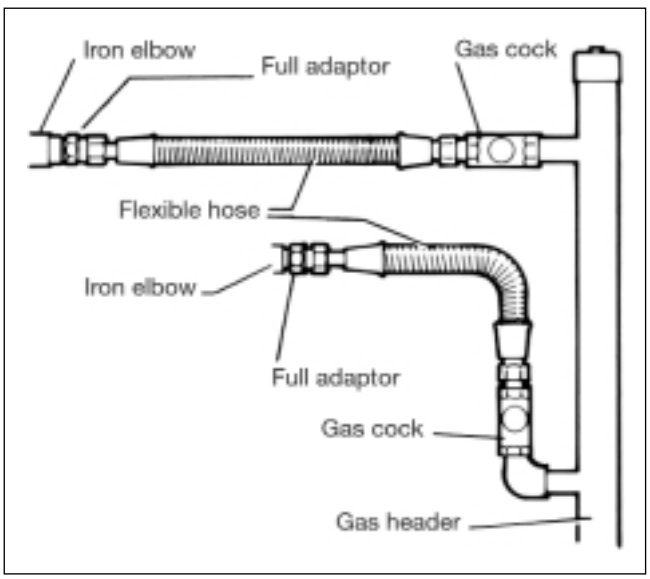

DETAIL OF GAS HEADER FLEXIBLE HOSES

15 MODULE ASSEMBLY - Exploded view

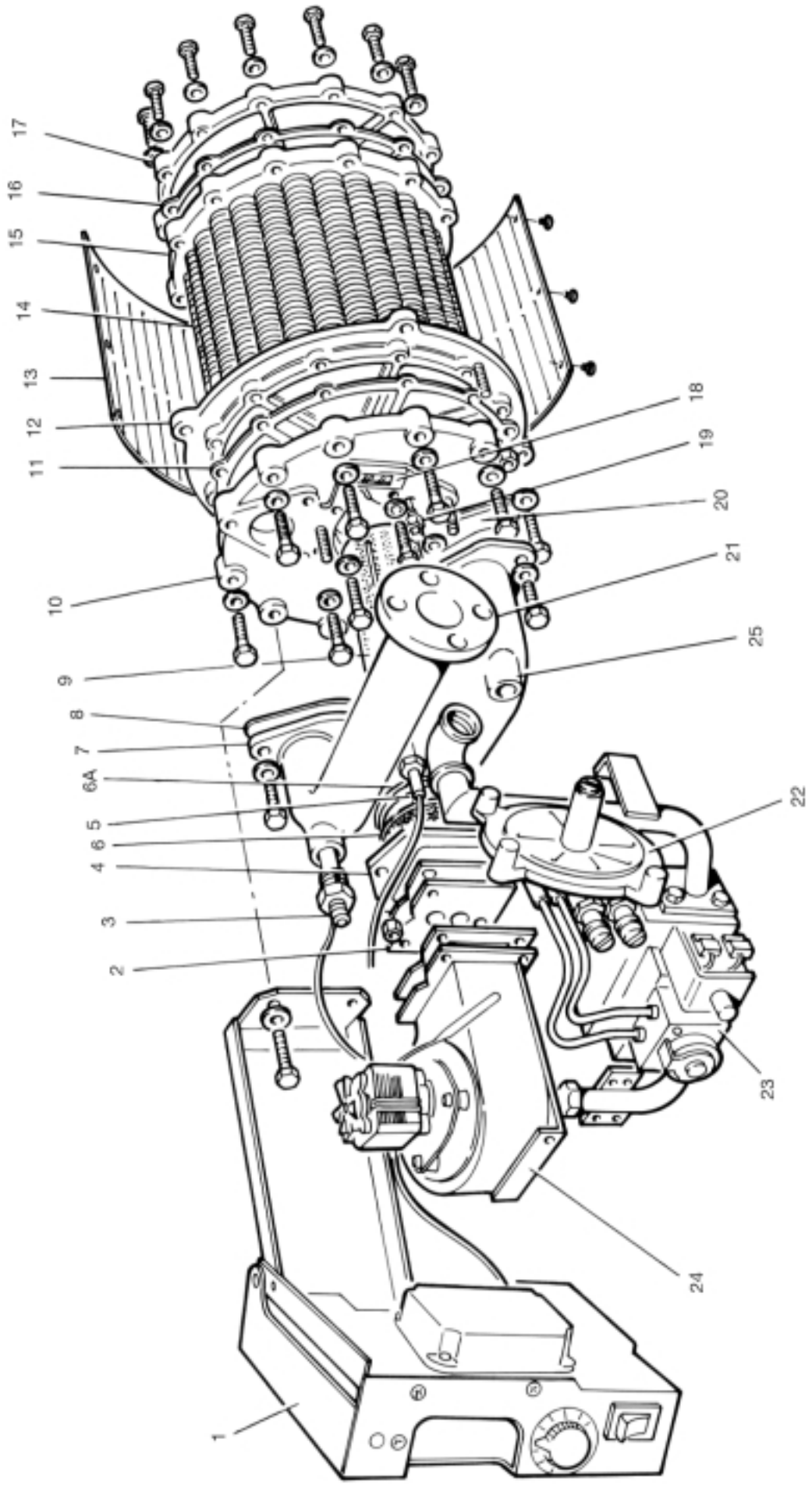

LEGEND

1. Control chassis assembly.
2. Multi-hole plate and cork gaskets.
3. Safety temp. limiter pocket.
4. Square to round casting.
5. Ignition electrode.
6. Burner cork gasket.
6A. Burner fibre gasket.
7. Flow header.
8. Flow header gasket.
9. Burner.
10. Top cover plate.
11. Cover plate gaskets.
12. Top tube plate.
13. Gas distribution screen.
14. Finned copper tubes.
15. Bottom tube plate.
16. Cover plate gasket.
17. Bottom cover plate.
18. Sight glass.
19. Flame sensor.
20. Return header gasket.
21. Return header.
22. Gas / air control.
23. Gas valve.
24. Fan assy.
25. Thermostat pocket.

Note. Items 22 & 23 supplied as an assembly.

16 ELECTRICAL CONTROLS - Exploded view

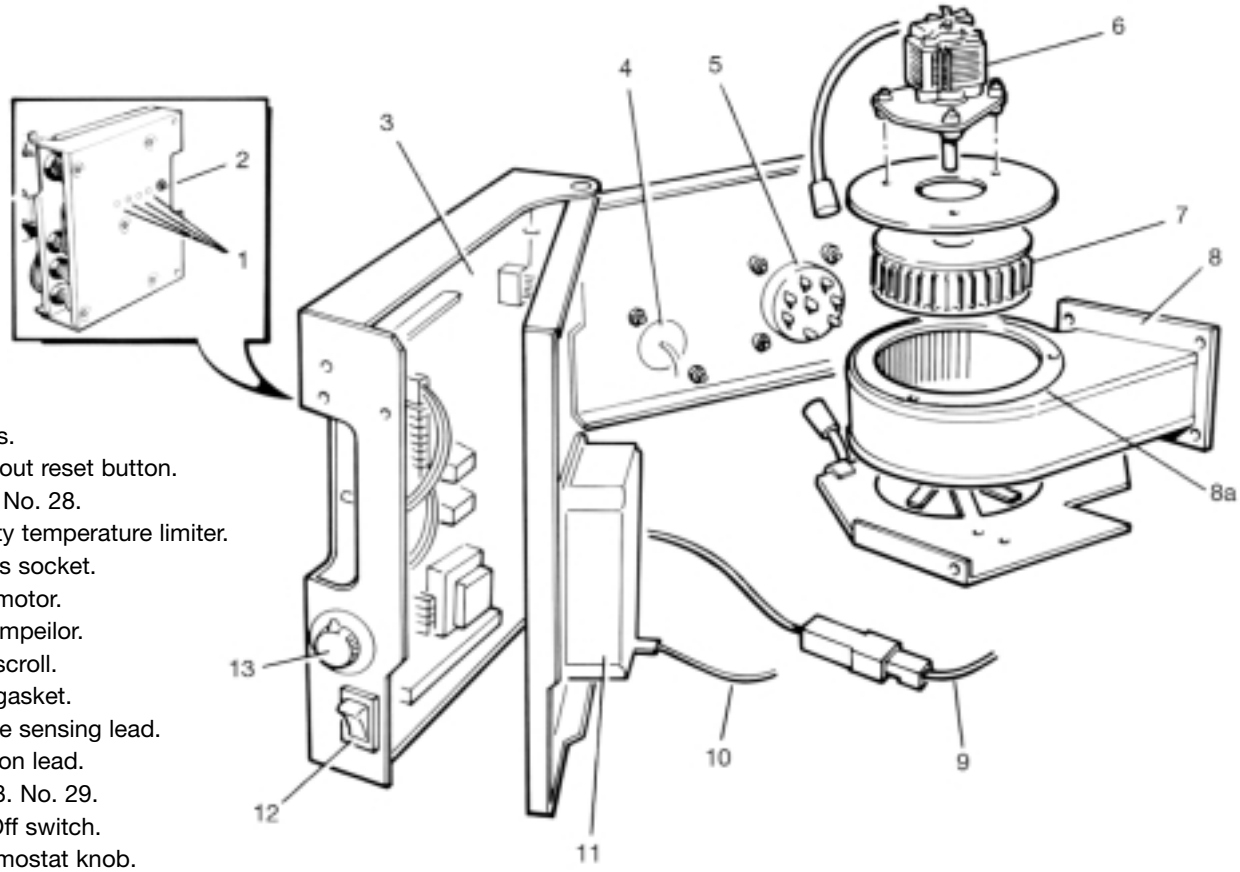

LEGEND

1. LED's.
2. Lockout reset button.
3. PCB No. 28.
4. Safety temperature limiter.
5. Mains socket.
6. Fan motor.
7. Fan impeilor.
8. Fan scroll.
8a. Fan gasket.
9. Flame sensing lead.
10. Ignition lead.
11. PC13. No. 29.
12. On/Off switch.
13. Thermostat knob.

17 GAS LINE

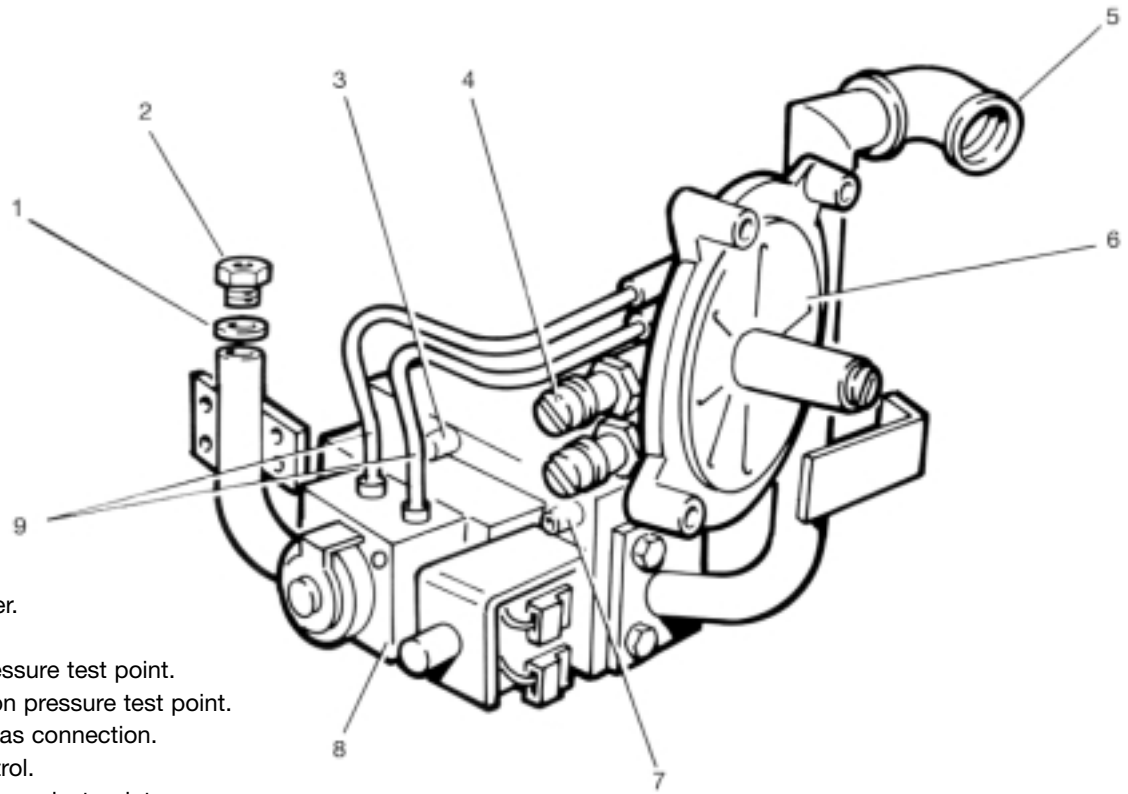

LEGEND

1. Injector washer.
2. Injector.
3. Gas outlet pressure test point.
4. Gas lair suction pressure test point.
5. Iron elbow - gas connection.
6. Gas 1 air control.
7. Gas Inlet pressure lest point.
8. Gas valve.
9. 4 mm Sensing lines.

Note. Items 6 & 8 supplied as an assembly.

COMMISSIONING AND TESTING

The **Ideal Concord Super** boiler must be commissioned and tested by a qualified gas/heating engineer. A knowledge of electrical wiring is necessary.
Upon request, Caradon Heating Ltd., will provide a quote for commissioning or re-commissioning after servicing. Make sure that the electrical supply to the boiler is OFF at the main isolator switch. Remove the orange module covers. Check that the black mains voltage plug on the left-hand side of each module is pulled out.

FILLING THE BOILER WITH WATER

Fill the system by admitting water at the lowest point. This will ensure air is forced from the tubes of the heat exchangers.

WATER CIRCULATION

Switch on the pump motor and check that water is circulating and the pump is vented.

Check the operation of the water flow switch. It should switch off the electrical supply to the modules if the water flow rate fails below two-thirds of design water flow-rate (in Tables 1 & 2).

HEADER GAS SOUNDNESS & PURGING THE GAS LINE

Turn the top module gas service tap ON. Connect a manometer to the tapping point at the top of the gas header (see Frame 14 & PTP1 - Frame 29).

Slacken the nut on the union, connecting the top module to the gas header, and purge the gas header by turning the mains inlet gas tap on until gas is smelt then retighten the union connection.
Turn off the top module gas service tap and ensure all other module gas service taps are in the off position. Take note of the manometer reading and turn off the mains inlet gas tap. A subsequent fall in pressure indicates a leak between the mains inlet gas tap and individual module gas service taps which MUST be made good. The mains inlet gas tap can then be turned on again.

CONTROL LINE GAS SOUNDNESS (Frames 14,17 & 29)

Carry out the following test on each module in turn:

1. Turn on the module gas service tap.
2. Turn off the mains inlet gas tap, and observe the manometer pressure as above. This pressure should NOT fall by more than 2.5 mbar (1 in.w.g.) in one minute. If this rate of fall is exceeded, leakage past the combination gas control seat or leakage from joints in this section of gas line MUST be investigated.
3. Turn off the module gas service tap and continue with the next module.

Pre-firing check (refer Frames 15, 16,17 & 18).

Ensure that:

(a) The electrical supply to the boiler is OFF.

(b) The orange covers are removed.

(c) The black mains plugs on the left side of each module are removed.

Note: EXTREME CARE SHOULD BE TAKEN WHEN THE MODULE IS RUN WITHOUT A COVER.

Each module should be checked as follows:

1. Switch the module onloff switch to OFF. (Frame 16).
2. Turn the module gas service tap to OFF.
3. Check that the low voltage 10-way plug is fitted to printed circuit Board No. 28.
4. Fit the black mains voltage plug into the connection point on the left-hand side of the module (refer Frame 18).
5. Switch ON the electrical supply to the boiler at the main isolator switch.
6. Switch the module on/off switch to ON.

The following sequence of events will occur:

(a) The module 'mains ON' light will be illuminated.

(b) For multi-module boilers: The fans will start and run for approx 30 seconds (part of the 3 volume air change safety feature). The tan will stop for from 1 to 50 secs. depending on its position in the switching order, It will then restart & run for approx. 15 sec. If the lockout warning light illuminates at this stage press the lockout reset button. For single module boilers: the fan will start and run for approximately 15 seconds.

(c) The ignition spark commences, continues for 4 seconds then ceases. (The spark can be seen through the sight glass in the module front).

(d) At the end of the 4 second ignition period, the combustion lockout light will be illuminated. The mains ON light will remain illuminated and the fan will continue to run.

18 MAINS PLUG

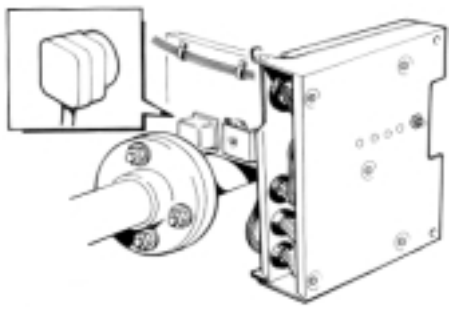

19 PANEL REMOVAL

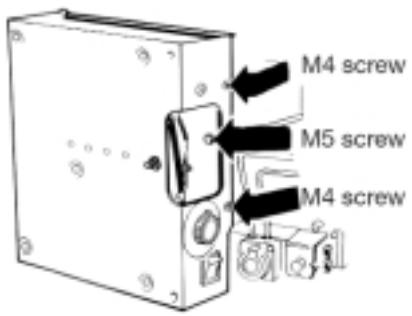

(e) Turn the module onloff switch to OFF. The lights will be extinguished and the fan will stop.

Turn OFF the electrical supply to the boiler.

DIFFERENTIAL AIR PRESSURE

Connect an inclined gauge to measure the pressure difference across the multi-hole plate. The pressure tapping is connected to the lower pressure test point of the gas-air ratio control and the suction tapping to the upper test point (Frame 20).
If when the fan is operating on air alone the differential air pressure is less than 1.1 mbar (0.44 in. wg.) the commissioning procedure must not continue.
Check the soundness of the connections and the fan performance.
Note. It is not possible to check the soundness of the suction line connections using leak detection fluid.

IMPORTANT:

The gas setting pressures MUST NOT be reset to the values given in the following section unless the differential air pressure is greater than 1.1 mbar (0.44 in.w.g.).

FIRING CHECKS (Frames 14,16 and 17)

Note:

(i) The minimum gas pressure in the gas header should be 15 mbar (6 in.w.g.) with all modules firing. The maximum pressure should not exceed 25 mbar (10 in.w.g.).

(ii) The draught stabiliser should be set to control between neutral and 0.2 mbar (0.08 in.w.g.) draught in the casing, with one or all modules firing.

A test point is provided in the boiler casing adjacent to the flue outlet socket.

Carry out the following firing checks on each individual module, commencing with the top left module and finishing with the bottom right. Ensure that the boiler is full of water and that the main and any boiler primary pumps are running.

1. Swing out together as one unit the inner and outer front panels by releasing the single M5 screw (see Frame 19) observed through the panel right-hand cutaway.
This screw fastens the inner front panel to the fan plate.

2. Connect a manometer to the pressure test point at the outlet end of the gas valve (Frame 20).

3. Connect a manometer to the pressure test point at the inlet end of the gas valve.

4. Turn on the module service gas tap and mains inlet gas tap.

5. Switch ON the boiler mains isolator and put the module on/off switch to ON. The following sequence of events should occur:

(a) The mains ON light will illuminate.

(b) For multi-module boilers. The fan will start and run for approximately 30 seconds (part of the 3 volume air change safety feature) then stop for 1 - 50 seconds, depending upon the module's position in the switching sequence. It will then re-start and run for approximately 15 seconds.
For single module boilers
The fan will start and run for approximately 15 seconds. If the lockout warning light illuminates at this stage press the lockout reset button.

(c) The ignition period will commence, the gas valves will open and a spark will be generated between the ignition electrode and the burner (visible through the sightglass).

(d) The burner will light and the burner ON light will be illuminated.

If the burner fails to light, the lockout light will be illuminated at the end of the 4 second ignition period and the fan will run on.

Another attempt at ignition can be made by waiting 10 seconds and then pressing the lockout button.

After 10 - 20 seconds of pre-purge fan run sequence (c) and (d) will be repeated. Should any module still not fire and the gas line has been properly purged, refer to the fault-finding instructions.

6. When the burner is firing allow the module to run for at least 3 minutes. The gas valve outlet pressure should then be 6.8 mbar (2.7 in.w.g.) and the gas valve inlet pressure not less than 13.5 mbar (5.4 in. w.g.) A valve inlet pressure of less than 13.5 mbar indicates either a manifold pressure below the minimum 15.0 mbar (6.0 in. w.g.) or a part blockage between manifold and valve inlet.

20 PRESSURE TEST POINTS

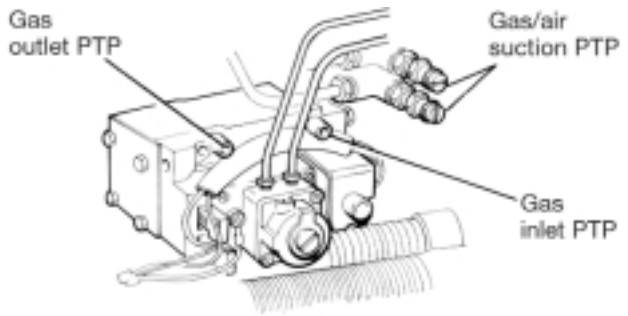

21 LOCKOUT - RESET

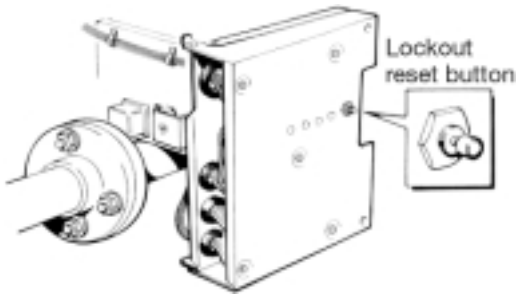

7. If adjustment is necessary remove the screw cap of the gas/air control unit which projects horizontally at the far right-hand side of the module (refer Frame 22).

DO NOT ATTEMPT TO ADJUST THE FACTORY PRE-SET GAS RATE LIMITER WHICH FACES YOU ON THE FRONT OF THE GAS VALVE.

Using a screwdriver, turn the adjustment screw within the projecting tube under the cap until the gas valve outlet pressure is 6.8 mbar (2.7 in.w.g.).

Switch the module OFF and then ON again to check that the pressure is correct, again allowing several minutes of firing for the pressure to stabilize. If the setting is consistently repeated, refit the screw cap of the gas/air control unit.

8. Switch OFF, disconnect the manometers and screw down the sealing screws within the gas valve test points.

Close the front panel and retain with the M5 posi-drive screw.

SAFETY CHECKS TO BE CARRIED OUT ON ALL MODULES

1. Ensuring lockout

With the module running, turn off the module gas service tap. The burner will stop firing, the burner ON light will be extinguished and the fan will run on.
A single attempt to relight will be made as follows:
After approx 15 seconds during which only the mains on light is illuminated, the ignition sequence will start, the spark will operate for 4 seconds after which the lockout and mains on lights will be illuminated. The fan will run on. If this sequence of events does not occur, replace printed circuit board No. 28 to which the lights are attached.

2. Combustion

Fire each module, on its own, blanking off the fan air inlets of ALL the NON-FIRING modules, using the sheets of self-adhesive paper supplied in the module hardware pack. Measure CO and CO_2 for each module. A sampling point is provided in the top of the boiler casing, adjacent to the flue outlet socket (Frame 14).

For DRAEGAR tests note the following:

(a) The sampling line, however short, should ALWAYS be purged.

(b) CO_2 tubes are marked in per cent divisions and ONE pump only is required. CO tubes are also marked in divisions indicating parts per million (p.p.m.),

(c) The ratio % CO / % CO_2 should not exceed 0.001. For convenient reference, the table below (Table 5) shows maximum CO levels in p.p.m. (read direct from tube) related to various CO_2 levels.

Low CO_2 levels are included to cover dilutions due to casing and flue volume on the larger boilers.

Remove the fan inlet blanking material from all modules and fire all modules together. Measure the gas pressure at the gas header test point and ensure that it is not less than 15 mbar (6 in.w.g.).

Check also that the draught stabiliser is controlling draught between neutral and 0.2 mbar (0.08 in.w.g.).

With all modules firing, measure CO and CO_2 levels again and refer to Table 5 for maximum allowable CO content.

IMPORTANT

After the combination tests have been conducted it is essential that in order to comply with the European requirements to provide a three times the casing volume prepurge the boiler should always be left to operate with at least half the modules switched on and their fans in working order.

3. Detector current

The main burner flame detector current may be checked by breaking the inline connector lead and inserting a micro-ammeter. The flame current should be 6-8 uA.

4. Safety temperature limiter

If the water flow rate through the boiler is adequate the safety temperature limiter should not operate when the load on the boiler is GRADUALLY reduced from maximum to minimum.

The safety temperature limiter is mounted on the steel panel at the left-hand side of the module. Reset by pushing in the 'reset' button (refer to Frame 23).

ONCE COMMISSIONING HAS BEEN COMPLETED, ALL MODULE COVERS SHOULD BE REPLACED.

Ensure that all module on/off switches are left in the ON position.

22 PRESSURE ADJUSTMENT

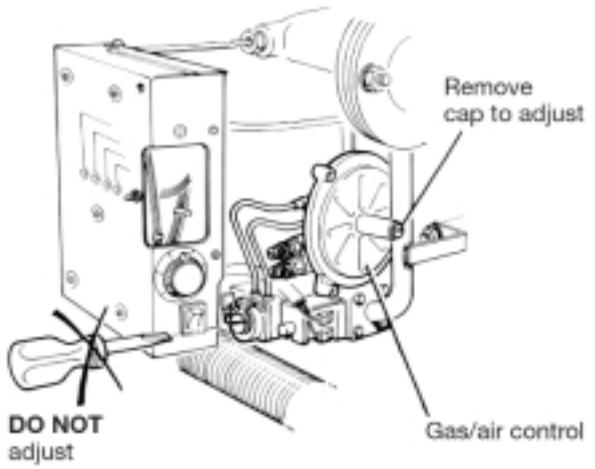

23 SAFETY TEMPERATURE LIMITER RESET

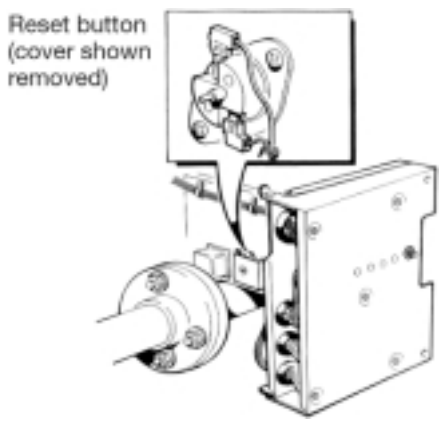

ADJUSTMENT OF SEQUENCE CONTROL

Thermometers mounted in the flow and return pipes to the boiler will give a check on the thermostat settings and will indicate whether the water flow rate is correct to give a temperature rise across the boiler of 10˚C. to 12˚C.

Each module's individual electronic adjustable control thermostat (which is mounted on the right - hand face of the front panel) should be set with reference to Table 6 and Frame 24, which shows the boiler thermostat scale.

This method of adjustment will give approximate control of the flow temperature which will be adequate for most applications. For more accurate control Caradon Heating Ltd., can quote for a commissioning which can, if required, include the accurate calibration of the electronic adjustable thermostats.

Table 5 MAXIMUM ALLOWABLE CO CONTENT

CO_2 (as read)	1.9	2.6	3.2	3.9	4.5	5.1	5.8	6.4	7.1	7.7	8.4	9.0	9.6	10.3	10.9	11.6
Maximum allowable CO p.p.m. (as read)	15	20	25	30	35	40	45	50	55	60	65	70	75	80	85	90

Table 6

Mixed RETURN temperature settings for module electronic adjustable control thermostat for individual boilers.

Boiler sizes kW Individual Boilers		Thermostat Settings					
50 V							1
100 V						1	4
150 V					1	3	5
150 VA				B	1	3	5
200 V				1	2.5	4	5.5
250 V		B	1	2.2	3.4	4.6	5.8
250 H		B	1	2.2	3.4	4.6	5.8
300 V		1	2	3	4	5	6
300 H		1	2	3	4	5	6
350 V	**Front**			B	1	2.5	4
	Rear			1	2.5	4	5.5
400 V	**Front**			B	1	2.5	4
	Rear			1	2.5	4	5.5
450 V	**Front**	B	B	1	2.2	3.4	4.6
450 V	**Front**	B	1	2.2	3.4	B	4.6
450 V	**Rear**	B	1	2.2	3.4	4.6	5.8
500 VH	**Front**	B	1	2.2	3.4	4.6	5.8
	Rear	B	1	2.2	3.4	4.6	5.8
550 VH	**Front**	B	1	2	3	4	5
	Rear	1	2	3	4	5	6
600 VH	**Front**	1	2	3	4	5	6
	Rear	1	2	3	4	5	6
Module No. refer Frames 5, 6 & 7		6	5	4	3	2	1
B - denotes blank							

Note.

Due to the different starting characteristics built into individual wiring centres, modules set atthe same control position may not start or shut down at exactly the same time.

Two or more boilers of the same size may be considered as a 'single' boiler with the corresponding modules or each side switching virtually together.
Two boilers of a different size e.g. 200kW and 150kW may be treated as a 'single' 350kW boiler.
Those arrangements should result in a turn down ratio of up to 6/1 maximum, which will suffice for most applications. If a turn down ratio of more than 6/1 is required, on installations where the total number of modules fitted to single or multiple boilers exceeds six, Caradon Heating Ltd. will be pleased to quote for accurate calibration of the electronic adjustable control thermostats. This work can be carried out as a part of the commissioning procedure. The maximum practical turn down ratio is 12/1.

REMOTE WARNING LIGHTS

Multi-module boilers only.
Remote warning lights supplied by the installer indicating flame failure lockout, burner on, and overheat may be wired to the wiring centre - refer to Frame 12.

SERVICING INSTRUCTIONS

IMPORTANT

In order to ensure sate and reliable operation of **Ideal Concord Super** boilers it is essential that regular maintenance be carried out by competent staff who have received instruction in maintenance, fault finding and commissioning procedures for this boiler series.

ANNUAL servicing is recommended.

BEFORE CARRYING OUT ANY SERVICING PROCEDURE:

1. Isolate the boiler electrical supply.
2. Turn off the gas service tap on the module being serviced.
3. Be aware that the 4 mm pipes connecting the gas valve to the gas/air control unit are factory sealed and MUST NOT be disturbed.

The following procedure should be carried out annually.

Preparation for servicing.

Possible spares required:

Fan motorlimpellor housing gasket.
Round cork burner gasket.
Round foil-faced giass-fibre gasket complete with 'U' shaped extension.
Square cork fan outlet gaskets (2).
Ignition electrode with lead.

Flame sensing probe with lead.

1. Unscrew the two retaining screws from the front of the orange cover and remove the cover.
2. Withdraw the multi-pin plug from the left-hand side of the module and switch off the module on/off switch.
3. Unscrew the M5 screw at the right-hand side of the rear control panel (see Frame 19) & swing the panel to the left.
4. Disconnect the lead to the ignition electrode from Board No. 29 control box and withdraw it through the cable tie wrapped round the return elbow behind the gas valve.
5. Release the fan motor lead and mains harness lead from the clip at the left-hand underside of the fan plate.
6. Unfasten the plug and socket connection to the fan motor.
7. Unfasten the plug and socket connection to the flame sensor.
8. Undo the 6 mm suction sensing line union connections at the 'square to round' casting and at the gas/air control unit and remove the sensing line.
9. Undo the 6 mm pressure sensing line union connections at the fan housing base and at the gas/air control unit and remove the sensing line.
10. Undo the 3 elongated M8 nuts with slotted heads, securing the fan assembly.
11. Remove the fan assembly, taking care not to damage the fan impellor.
12. Disconnect the burner earth lead from the earthing post at the left-hand rear side of the chassis.
13. Remove burner, complete with its integral ignition electrode.

Servicing the ignition electrode and burner

1. Brush the inside and outside of the burner, making sure to clear any blockages in the burner.
2. It the burner shows any sign of deterioration it should be replaced.
3. Inspect the ignition electrode. If it shows any sign of erosion or if there is damage to the insulation or integral lead, it should be replaced.
   Undo the retaining nut and withdraw the electrode from its housing. Fit new electrode.
4. Check the spark gap and adjust, if necessary. It should be 4-5 mm - see Frame 25.

Servicing the flame sensing probe

Undo the retaining nut and withdraw the probe. If it shows any signs of erosion, damage to insulation or to the integral lead IT MUST BE REPLACED.

Inspecting the finned tubes of the heat exchanger(s)

Inspect the DRY side of the heat exchanger finned tubes by viewing through the burner opening, using an electric torch and mirror.

In general, on intermittently operated systems, it will not be necessary to undertake chemical cleaning more than once every two years although, as mentioned above, the DRY side should be examined at least once a year to assess the rate of build up of debris.

When systems are operated virtually continuously, heat exchangers should not exceed 3,000 hours firing time between chemical cleaning. For instructions on chemical cleaning, see relevant section.

24 BOILER ELECTRONIC ADJUSTABLE CONTROL THERMOSTAT

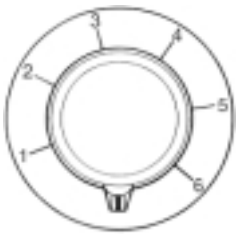

Settings	Temperature
1	67˚C
2	70˚C
3	73˚C
4	76˚C
5	79˚C
6	82˚C

25 IGNITION ELECTRODE SETTING

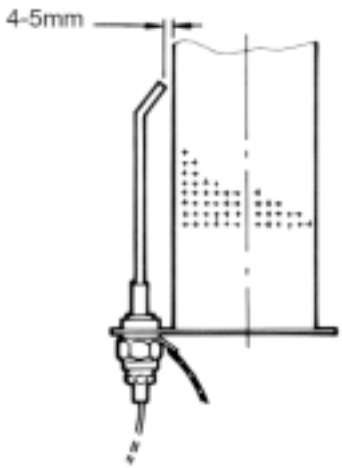

Cleaning the fan.

1. Unscrew the three M4 screws securing the fan motor/impellor assembly and remove the assembly from the fan scroll housing.
2. Using a soft brush, remove any accumulation of dust from the fan blades, the inside of the fan scroll, the 'square to round' casting and the area around the multi-hole plate.
3. Refit the fan motor limpellor assembly in reverse order, ensuring the motor leads are at the left-hand side to avoid interference of the motor with the flow pipe and the control panel.

Cleaning the module cover filter.

The module cover is fitted with a polyurethane foam filter, which forms the bottom of the cover. This filter is retained by two edge clips and two M5 nuts.

To remove the filter, remove the two M5 nuts, then prise open the edge clips and release the wire frame of the filter from the clips (see Frame 26).

Wash the filter in lukewarm soapy water. It should then be thoroughly rinsed and allowed to dry.

Refit in reverse order.

Re-assernbly

1. Replace the flame sensing probe in position and lightly tighten its retaining nut.
2. Replace the burner in the module, renewing the round foil-faced, glass-fibre gasket complete with the 'U' shaped extension.

Ensure the ignition electrode lug is fully seated into its recess.

3. Remake the burner earth connection to the earth post.
4. Replace the fan assembly and secure it with the three elongated M8 nuts.

Notes:

(i) Do NOT overtighten the nuts as damage to the casting may occur.

(ii) If the round cork gasket between the 'square to round' casting and the burner is damaged it must be replaced.

5. Remake the 6 mm suction and pressure sensing lines. **Note.** Both lines should be blown through to ensure they are free from obstruction. Ensure that the compression fittings are secure.
6. Remaketheflame sensor plug and socket connection.
7. Remake the fan motor plug and socket connection.
8. Secure the fan motor lead and mains harness lead in the clip on the left-hand underside of the fan plate.
9. Pass the ignition lead through the cable tie wrapped round the return elbow behind the gas valve.
10. Remake the ignition electrode lead connection.
11. Secure the control panel with the M5 screw.
12. Remake the multi-pin plug connection.
13. Switch the on/off switch to ON.
14. Replace the front cover.

IMPORTANT

On completion of the Service, recommission and test the boiler in accordance with the "Commissioning and Testing" Instructions, page 20, with particular reference to measuring the differential air pressure, and to fan performance and safety checks.

26 REMOVAL OF MODULE COVER FILTER

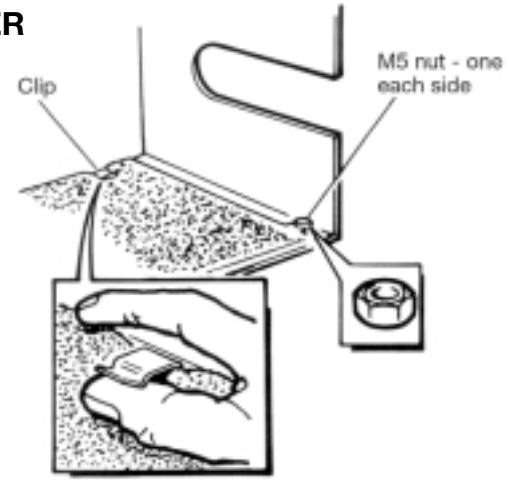

HEAT EXCHANGER - Cleaning Instructions

Chemical cleaning of the dry side of boiler modules

WARNING. Before carrying out any servicing procedure:

1. Isolate the boiler electricity supply.
2. Turn off the gas service taps on the modules being serviced.

This method of cleaning uses either FERNOX DS.10 or SENTINEL DRY SIDE CLEANSER which are available from local stockists or the manufacturers:

Fernox Manufacturing Co. Ltd.,
Britannica Works, Clavering, Essex, CB11 4QZ
Tel. 01799 550 811

or

Sentinel Division, Grace Dearborn Ltd.,
Widnes, Cheshire, WA8 8UD
Tel. 0151 424 5351.

The following method of cleaning assumes there is an adequate supply of mains pressure water and a suitable drain on site.

CAUTION.

When added to water both Sentinel Dry Side Cleanser and Fernox DS.10 produce acid and MUST be treated with all the required precautions.

Ingestion and contact with skin, eyes and clothing must be avoided.

Wear rubber gloves and protective clothing, including safety glasses to avoid splashes in eyes.

Accidental splashes should be NEUTRALISED IMMEDIATELY with household soda as solution in water.

Sensitive areas, such as eyes, can be rinsed first with SODIUM BICARBONATE, followed by plain water. Obtain the aid of a medical practitioner in the case of personal accident.

FERNOX DS.10 does NOT produce fumes or toxic gases, but it is recommended to work under good conditions of ventilation. Contact with zinc, aluminium, magnesium, cement, asbestos and bathtub enamel MUST be MINIMIZED or, at best, COMPLETELY AVOIDED.

KEEP ALL CHEMICALS AWAY FROM CHILDREN.

Materials and spares required in addition to those listed under servicing.

1. A solution of Fernox DS.10 or Sentinel dry side cleanser.
2. Container, minimum dimensions 350 mm x 350 mm x 350 mm.
3. Gas distribution screen (aluminium wrapper) and screws.
4. 40 mm nominal bore gaskets (module to header).
5. Triangular gaskets between module flow and return headers and top cover plate.
6. Cover plate gasket (top).
7. Cover plate gasket (bottom).

Preparing the boiler

1. Unscrew the two retaining screws from the front of the orange cover and remove the cover.
2. Withdraw the multi-pin plug from the left-hand side of the module and switch off the module on/off switch.
3. Unscrew the two M4 screws at the right-hand edge of the control panel and open the front control panel door (refer to Frame 19).
4. Unplug the low voltage 10-way plug from the top right-hand corner (viewed from inside) of the circuit board and withdraw it through the rear control panel.

   Note. The captive catch on the side of the 10-way plug must be unlatched.
5. Unscrew the three cable clips securing the low voltage harness at the left-hand side of the control panel support bracket and pull the harness clear.
6. Close the control panel front door and secure with the two M4 screws.
7. Isolate the boiler from the flow and return water pipes.
8. Drain the boiler.
9. Uncouple the flanges connecting the modules to the flow and return headers.
10. Release the union nuts connecting the gas inlet manifold to the modules.
11. Remove the fan, burner with ignition electrode and the flame sensing probe, as described in the Servicing Instructions.

27 SOLUTION LEVEL

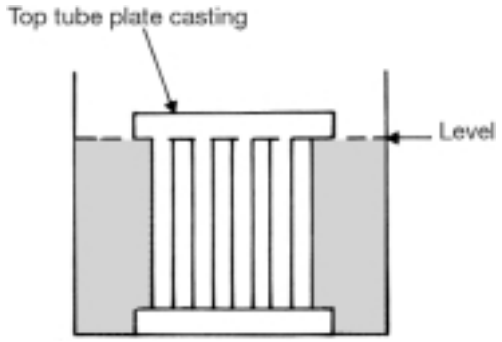

12. Remove the module gas line as follows:

    (i) Remove the four M4 x 10 mm lg. pozi-screws securing the injector pipe to the cast iron return pipe.

    (ii) Remove the nut securing the gas line bracket to its fixing stud.
13. Withdraw the adjustable control thermostat and safety temperature limiter sensors from their pockets.
14. Unscrewthetwo M5 x 10 mm lg. pozi-screws securing the control panel support bracket to the angle bracket and remove the control panel assembly.
15. Unscrew the four M10 nuts securing the module to the casing and withdraw the module.
16. Unscrew the screws holding the gas distribution screen over the finned tubes and remove the screen.

The module heat exchanger is now ready for cleaning.

Preparing the solution

For normal cleaning, dissolve Fernox DS.10 or Sentinel dry side cleaner in water to make a solution in the proportions of 7 kg. per 70 litres of water.

This should provide a solution strength to adequately clean a lightly scaled heat exchanger in approximately five minutes, depending upon the severity of the scaling. In order to reduce the cleaning time, a more concentrated solution may be made of proportions up to but NOT exceeding 2 kg. per 10 litres of water.

Pour the solution into a suitable container - the MINIMUM dimensions of which should be 350 mm x 350 mm x 350 mm.

A container of this size will require approximately 28 litres (6 gallons) of prepared solution to set up the initial bath.

When more than one module is to be cleaned, additional solution should be prepared for topping up the container.

Note. Refer Frame 27

There should be sufficient solution in the container to ensure, with the module immersed, that the solution level just reaches the underside of the top tube plate casting.

Cleaning

1. Immerse the module in the solution.

   The period of immersion will depend upon the severity of the scaling.

   Lightly scaled tubes can be successfully cleaned in approximately five minutes.

   Note. For best results, agitate the module periodically in the solution.
2. Remove the module from the container and THOROUGHLY rinse - a length of hose, fitted with a piece of flattened copper tube to form a nozzle, will be found to be adequate for this purpose.
3. For severely scaled heat exchangers, it may be necessary to remove any remaining stubborn deposits by brushing and then re-immersing into the solution for a few minutes.

   In extreme cases, it may be necessary to repeat this process.

   After the final immersion, the heat exchanger should be given a THOROUGH rinse.
4. Repeat the cleaning operation for EACH module, topping up the solution each time to the underside of the top tube plate casting.

Re-assembly

Re-assemble the module gas line, burner with spark electrode, fan and control chassis assembly, and flame sensing probe in the reverse procedure to that detailed in 'Preparing the boiler.'

SPECIAL ATTENTION should be made to the following points:

1. ENSURE the gap between the gas distribution star plate and the gas injector is 6 mm - 10 mm.
2. The slots in the gas distribution screen (aluminium wrapper) MUST BE IN LINE with the outermost points of the finned tubes.
3. The gas distribution screen MUST BE HELD TIGHTLY against the finned tubes when the securing screws are tightened.
4. Replace the burner in the module.
   The round cork gasket which seals the fan assembly to the burner, and also the round gasket complete with 'U' shaped extension, sealing the burner to the module casing, MUST BE RENEWED.

Module waterway cleaning instructions

WARNING: Before carrying out any servicing procedure:

1. Isolate the boiler electrical supply.
2. Turn off the gas service taps on the modules being serviced.

If, as a result of make-up water entering the system, or for any other reason, it is considered necessary to remove limescale from all modules, then this operation may be undertaken using the cleansers Fernox DS.3 or Sentinel scale clean with the boiler disconnected or isolated from the system but retaining all modules in situ. Should it be suspected that one or two modules only require de-scaling individually then these modules may be removed and cleaned whilst the remaining modules continue to operate and provide some degree of heat service.

Module blanking plates and blank pipe flanges are available from Caradon Heating Ltd., for this purpose.

The manufacturer of Femox DS.3:

Femox Manufacturing Co. Ltd.,
Britannica Works, Clavering, Essex, C811 40Z
Tel. 01799 550 811

and Sentinel Scale Clean:

Sentinel Division,
Grace Dearbom Ltd.,
Widnes, Cheshire, WA8 81LID
Tel. 0151 424 5351.

will provide general information and literature on the most efficient procedure and local stockists.

An inspection of the module waterways may be undertaken before andfor after cleaning. The procedure below details the method of draining down the boiler, removing a module and dismantling for inspection of the waterways.

Preparing the boiler

1. Unscrew the two retaining screws from the front of the orange cover and remove the cover.
2. Withdraw the multi-pin plug from the left-hand side of the module and switch off the module on/off switch.
3. Unscrew the two M4 screws at the right-hand edge of the control panel and open the front control panel door - refer Frame 19.
4. Unplug the low voltage 10-way plug from the top right-hand corner (viewed from inside) of the circuit board and withdraw it through the rear control panel.

   Note. The captive catch on the side of the 10-way plug must be unlatched.
5. Unscrew the three cable clips securing the low voltage harness at the left-hand side of the control panel support bracket and pull the harness clear.
6. Close the control panel front door and secure with the two M4 screws.
7. Isolate the boiler from the flow and return water pipes.
8. Drain the boiler.
9. Uncouple the flanges connecting the modules to the flow and return headers.
10. Release the union nuts connecting the gas inlet manifold to the modules.
11. Remove the fan, burner with ignition electrode and the flame sensing probe, as described in the Servicing Instructions.
12. Remove the module gas line as follows:

    (i) Remove the four M4 x 10 mm lg. pozi-screws securing the injector pipe to the cast iron return pipe.

    (ii) Remove the nut securing the gas line bracket to its fixing stud.
13. Withdraw the adjustable control temperature and safety temperature limiter sensors from their pockets.
14. Unscrewthetwo M5 x 10 mm lg, pozi-screws securing the control panel support bracket to the angle bracket and remove the control panel assembly.
15. Unscrew the four M10 nuts securing the module to the casing and withdraw the module.
16. Unscrew the screws holding the gas distribution screen over the finned tubes and remove the screen.
17. Remove the twelve 8 mm bolts and the centre 8 mm bolt which hold the bottom cover plate in the bottom tube plate.

    The plates can now be separated.

    The waterways can now be examined.

    If the tubes are scaled or partially blocked, the top cover plate MUST be removed by unscrewing the twelve 8 mm bolts, disposed around the periphery, and the six 8 mm bolts around the centre.

    The water passages in the tube plates and tubes can now be cleaned, either by replacing the module in the boiler and cleaning all modules (refer Fernox or Sentinel literature) or by immersing individual modules in a solution of DS.3 or Sentinel Scale Clean.

Re-assembly of the module after water tube cleaning

TAKE CARE:

1. The triangular lugs on the cover plates are in register with the corresponding lugs on the header castings - refer Frame 28.
2. NEW gaskets should be used between mating flanges.
3. Tighten the securing bolts EVENLY to a torque of 20 N/m (15 f/lbf).

Re-assembly can then be continued as detailed in the foregoing section.

28 ALIGNMENT LUGS

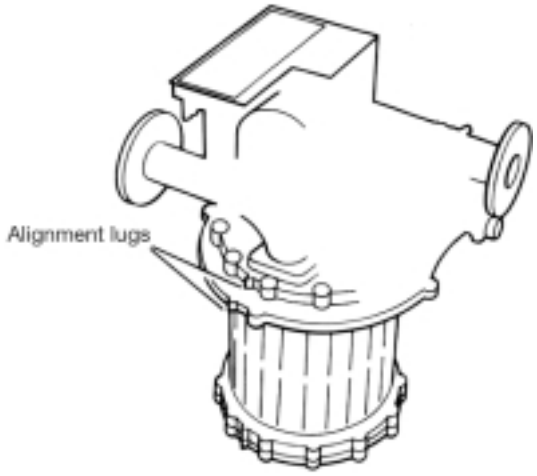

REPLACEMENT OF COMPONENTS

WARNING - Before working on the appliance:

1. Isolate the boiler electrical supply.
2. Turn OFF the gas supply at the inlet gas cock.

Note. To replace the following components, it will be necessary to remove the module cover as previously described in the Servicing Instructions.

It may also be necessary to open the control panel front and/or rear doors to gain access - refer to Frame 19.

Sight Glass

1. Undo the two screws securing the sight glass assembly to the front header casting.
2. Fit the replacement sight glass, ensuring the parts are in the correct order, i.e., gasket, glass, gasket and frame.
3. Retighten the two screws to ensure an airtight seal.

DO NOT OVERTIGHTEN.

Boiler Adjustable Control Thermostat Sensing Probe

1. Remove the retaining clip from the thermostat pocket in the boiler return header and withdraw the sensing probe.
2. Unplug the thermostat lead from printed circuit board No. 28 behind the front control panel door and withdraw the lead.
3. Fit the replacement probe in reverse order.

Boiler Adjustable Control Thermostat Potentiometer

1. Unplug the potentiometer lead from printed circuit board No. 28, behind the front control panel door.
2. Loosen the retaining screw of the thermostat control knob on the right hand side of the fascia and pull off the knob.
3. Undo the hexagon nut securing the potentiometer to the fascia and withdraw the potentiometer.
4. Fit the replacement potentiometer in reverse order.

Printed Circuit Board No. 28

1. Release the front control panel door.
2. Unplug all the push-on terminals from the board.
3. Release the board from the PCB stand-offs by depressing the tabs and withdrawing the board.
4. Fit the replacement board in reverse order.

Printed Circuit Board No. 29 (complete with black box)

1. Release the front and rear control panel doors together.
2. Unplug the push-on terminal strip at the right-hand side and the spark electrode lead.
3. Undo the four screws securing the black box complete.
4. Fit replacement box in reverse order.

Safety Temperature Limiter

1. Pull out the split pin & remove the phial & its metal retainer from its pocket in the flow elbow - refer to Frame 15.
2. Release the capillary from the edge clip.
3. Unscrew the two screws securing the control cover plate and remove the plate - refer to Frame 23.
4. Pull off the two electrical connections from the safety temperature limiter.
5. Fit the replacement device in reverse order, ensuring the capillary is routed above and behind the fan and secured in the edge clip.

Burner

1. Remove the fan assembly as previously described in the Servicing Instructions.
2. Withdraw the burner, complete with its integral ignition electrode.
3. Undo the nut securing the ignition electrode and transfer the electrode to the new burner.
4. Fit the replacement burner in reverse order.

Note. Always fit new foil-faced and cork gaskets.

5. The module MUST now be recommissioned with particular reference to measuring the differential air pressure. Refer to Commissioning and Testing (pages 20-22).

Ignition Electrode

1. Unplug the push-on terminal from the control box.
2. Undo the locking nut securing the electrode and withdraw the electrode from the burner.
3. Withdraw the lead through the cable tie wrapped round the return elbow behind the gas valve and remove the electrode.
4. Fit the replacement electrode in reverse order.

Flame Sensing Probe

1. Unfasten the plug and socket connection in the flame sensing lead.
2. Undo the nut securing the probe in the front casting and withdraw the probe.
3. Fit the replacement probe in reverse order.

Fan

1. Remove the fan assembly as previously described in the Servicing Instructions.
2. Undo the four bolts securing the 'square to round' casting to the fan outlet and transfer the casting to the new fan unit, replacing any damaged or deteriorating gaskets.
3. Fit the replacement fan assembly in reverse order.
4. The module MUST now be recommissioned with particular reference to measuring the differential air pressure. Refer to Commissioning and Testing (pages 20-22).

Gas Valve - Gas/air Control Unit Assembly

WARNING:

This assembly is supplied only as a complete service unit and changed as such - do not separate. The factory fitted 4 mm pipes are sealed and MUST NOT be disturbed.

1. Turn off the module gas service tap.
2. Disconnect the gas valve leads from the four push-on terminals and the earth screw.
3. Undo the 6 mm suction and pressure sensing lines at both ends and remove.
4. Unscrew the four M4 x 10 mm lg. screws securing the gas valve to the inlet pipe.
5. Unscrew the four M4 x 10 mm lg. screws securing the injector pipe to the water return elbow.
6. Remove the gas valve - gas/air control unit assembly.
7. Unscrew the four M4 x 10 mm lg. screws securing the injector pipe to the gas valve and transfer to the new gas valve, complete with 'O' ring seal.
8. Re-assemble in reverse order, taking care to ensure that the 'O' rings in the gas valve inlet and outlet are correctly fitted.
9. The module MUST now be recommissioned with particular reference to measuring the differential air pressure. Refer to Commissioning and Testing (pages 20-22).

Gas Injector

1. Unscrew the injector from the end of the gas outlet pipe.
2. Fit the replacement injector, renewing the gasket and ensuring that the gap between the gas distribution plate and injector is 6-10 mm.

29 GAS LINE SCHEMATIC

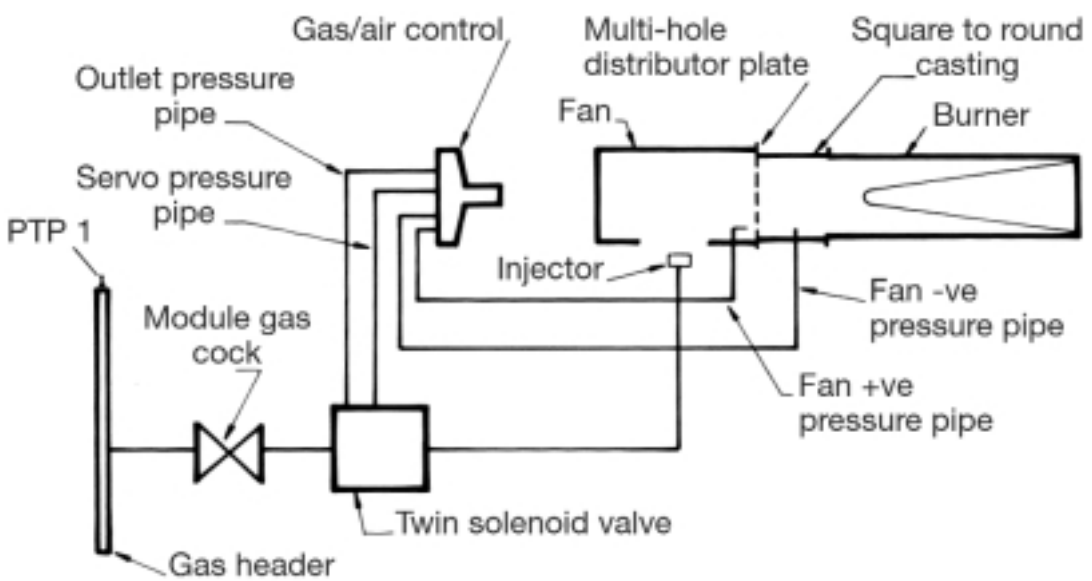

Gas Distribution Screen

1. Remove the heat exchanger from the casing as described in 'Heat Exchanger - Cleaning Instructions.'
2. Undo the screws securing the gas distribution screen and remove the screen.
3. Fit the replacement screen ensuring:
   - **(a)** The slots in the screen are in line with the outermost points of the finned tubes.
   - **(b)** The screen is held tightly against the finned tubes when the securing screws are tightened.
4. Re-assemble in reverse order to removal, renewing any damaged or deteriorated gaskets as necessary.

Module Cover Filter

1. Unscrew the M5 nut on each side of the cover, then prise open the edge clips and release the wire frame of the filter (see Frame 26)
2. Fit the replacement filter in reverse order.

Wiring Centre (Board No. 30)

1. Unscrew the four screws securing the wiring centre cover and remove the cover.
2. Disconnect the mains supply and individual module leads from the board, noting that the plug on the grey leads has its retaining clip underneath.
3. Release the board from the PCB stand-off's by depressing the tabs and withdrawing the board.
4. Fit the replacement board in reverse order.

30 CONTROL SEQUENCE LOGIC

Note 1 (Minimum time in seconds).

Module **1**-0 s Module **3**-10 s Module **5**-20 s

Module **2**-5 s Module **4**-15 s Module **6**-25 s

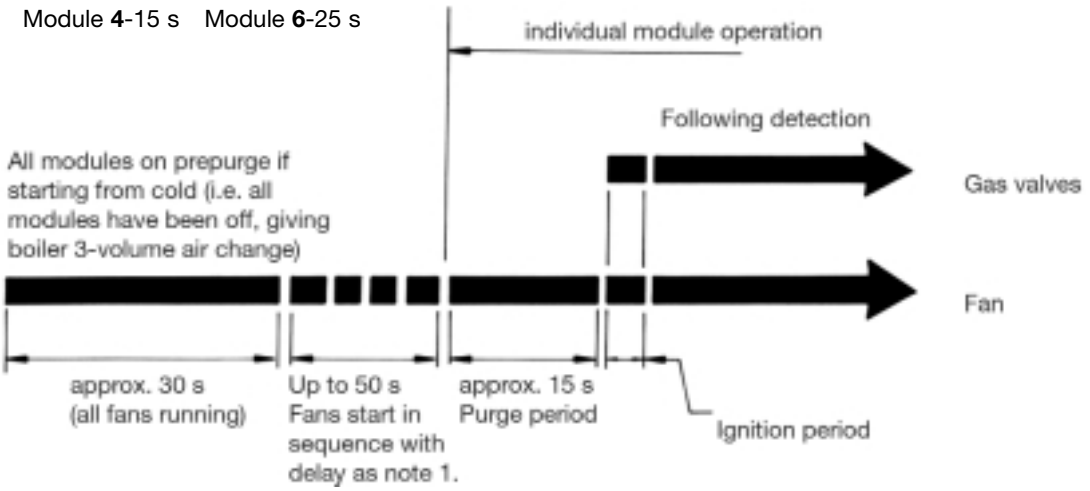

The following list comprises parts commonly required as replacement components due to damage, expendability, or such that their failure or absence is likely to affect safety or performance.

The list is extracted from the British Gas List of Parts, which contains all available spare parts.

Details of the British Gas Lists are held by gas regions, CARADON distributors and by merchants.

Ideal Concord Super Series 4, 50-600 Vert., 350-600 Hor.

When ordering spares please quote:

1. Boiler Model
2. Appliance G.C. Number
3. Product Code
4. Quantity

KEY	DESCRIPTION	QTY.	PRODUCT CODE
1	Burner bar (Bray)	1	058 014
2	Ignition electrode	1	100 613
3	Sensing electrode	1	100 612
4	Burner cork gasket (round)	1	012 589
5	Burner fibre glass gasket	1	057 860
6	Fan assembly	1	100 321
7	Sight glass frame, glass and gasket	1	078 881
8	Burner injector and gasket	1	079 722
9	Gas valve with gas/air control unit assembly	1	079 723
10	Negative pressure sensing line assembly	1	079 724
11	Positive pressure sensing line assembly	1	079 725
12	Safety temperature limiter manual reset LM5	1	004 038
13	Adjustable control knob - Bulgin	1	013 241
14	Adjustable control thermostat sensor	1	058 512
15	Adjustable control thermostat potentiometer assembly	1	100 614
16	Reset switch assembly (Lockout)	1	004 346
17	Printed circuit board PCB No. 28	1	100 646
18	Printed circuit board PCB No. 29	1	100 647
19	Module cover assembly - Vertical	1	100 823
20	Module cover filter	1	100 619
21	Printed circuit board PCB No. 30	1	100 648
22	Module flange gaskets	2	012 745
23	Module top cover plate gasket	1	100 936
24	Module bottom cover plate gasket	1	100 935
25	Module cover assembly - Horizontal	1	100 824
26	Header gaskets (triangular)	2	012 593
27	Gas distribution screen (aluminium wrapper)	1	100 804
28	Fan outlet cork gasket (square)	2	057 860
29	Fan scroll gasket (round)	1	--- ---

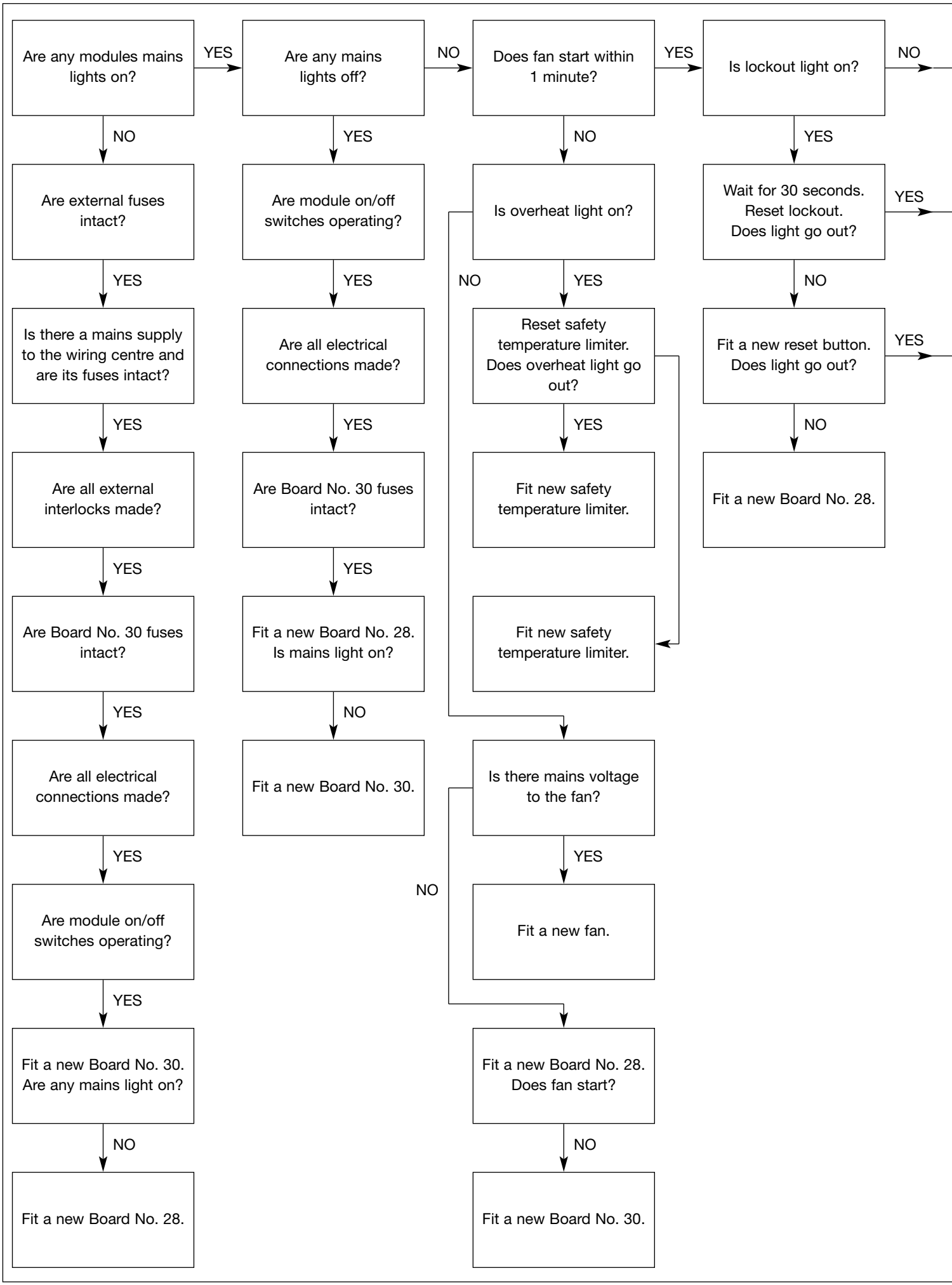
Are any modules mains lights on?
YES
Are any mains lights off?
NO
Does fan start within 1 minute?
YES
Is lockout light on?
NO
NO
YES
NO
YES
Are external fuses intact?
Are module on/off switches operating?
Is overheat light on?
Wait for 30 seconds. Reset lockout. Does light go out?
YES
YES
NO
YES
NO
Is there a mains supply to the wiring centre and are its fuses intact?
Are all electrical connections made?
Reset safety temperature limiter. Does overheat light go out?
Fit a new reset button. Does light go out?
YES
YES
YES
YES
NO
Are all external interlocks made?
Are Board No. 30 fuses intact?
Fit new safety temperature limiter.
Fit a new Board No. 28.
YES
YES
Are Board No. 30 fuses intact?
Fit a new Board No. 28. Is mains light on?
Fit new safety temperature limiter.
YES
NO
Are all electrical connections made?
Fit a new Board No. 30.
Is there mains voltage to the fan?
YES
YES
NO
Are module on/off switches operating?
Fit a new fan.
YES
Fit a new Board No. 30. Are any mains light on?
Fit a new Board No. 28. Does fan start?
NO
NO
Fit a new Board No. 28.
Fit a new Board No. 30.

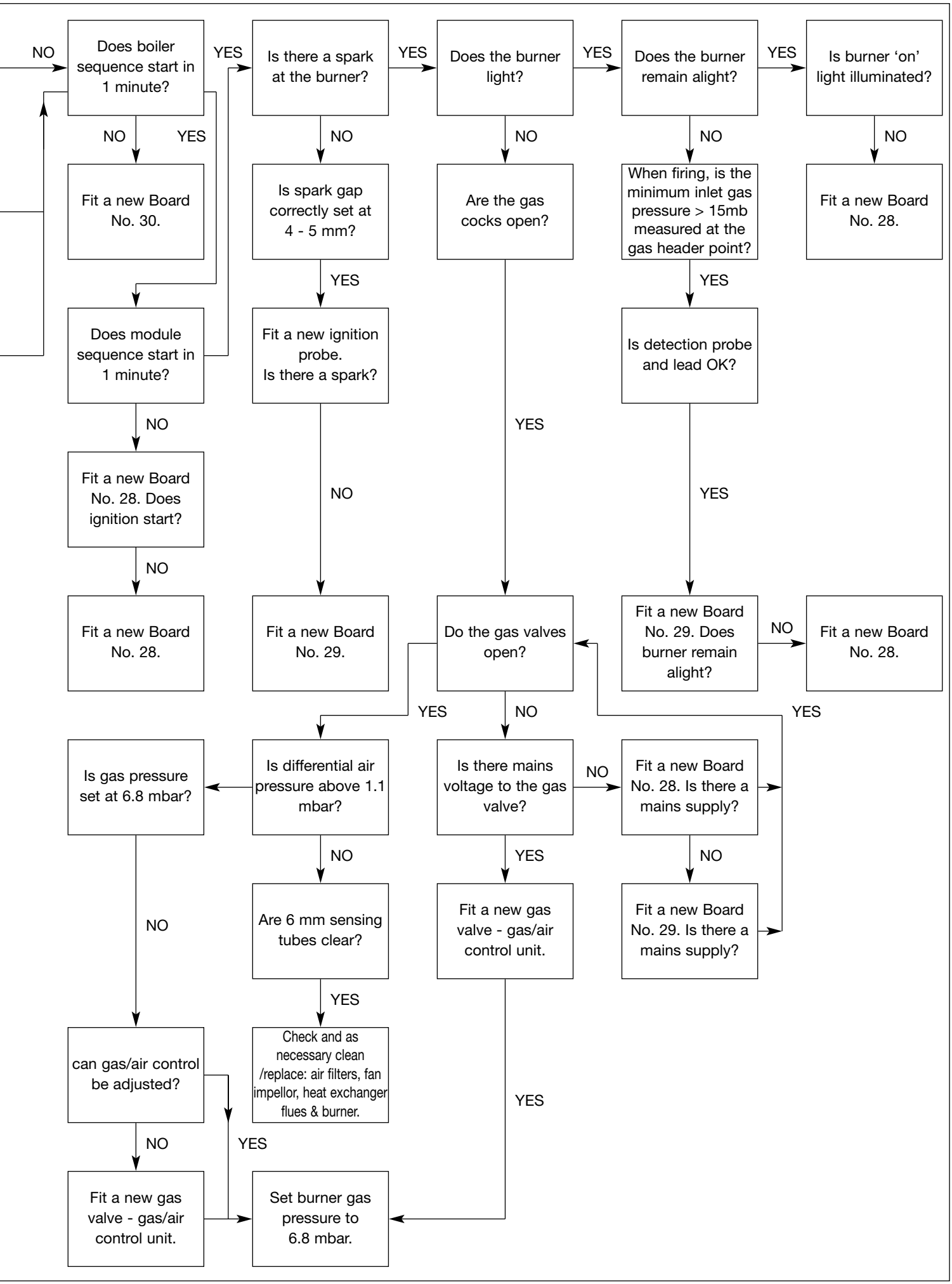
NO
Does boiler sequence start in 1 minute?
YES
Is there a spark at the burner?
YES
Does the burner light?
YES
Does the burner remain alight?
YES
Is burner 'on' light illuminated?
NO
YES
NO
NO
NO
NO
Fit a new Board No. 30.
Is spark gap correctly set at 4 - 5 mm?
Are the gas cocks open?
When firing, is the minimum inlet gas pressure > 15mb measured at the gas header point?
Fit a new Board No. 28.
YES
YES
Does module sequence start in 1 minute?
Fit a new ignition probe. Is there a spark?
Is detection probe and lead OK?
NO
YES
Fit a new Board No. 28. Does ignition start?
NO
YES
NO
Fit a new Board No. 28.
Fit a new Board No. 29.
Do the gas valves open?
Fit a new Board No. 29. Does burner remain alight?
NO
Fit a new Board No. 28.
YES
NO
YES
Is gas pressure set at 6.8 mbar?
Is differential air pressure above 1.1 mbar?
Is there mains voltage to the gas valve?
NO
Fit a new Board No. 28. Is there a mains supply?
NO
YES
NO
NO
Are 6 mm sensing tubes clear?
Fit a new gas valve - gas/air control unit.
Fit a new Board No. 29. Is there a mains supply?
YES
can gas/air control be adjusted?
Check and as necessary clean /replace: air filters, fan impellor, heat exchanger flues & burner.
YES
NO
YES
Fit a new gas valve - gas/air control unit.
Set burner gas pressure to 6.8 mbar.

COMBUSTION DATA SHEET

1. BOILER MODEL (see data plate)

(Please tick appropriate box) 50v ☐ 100v ☐ 150v ☐ 150va ☐ 200v ☐ 250v ☐ 300v ☐ 250h ☐ 300h ☐

350v ☐ 400v ☐ 450v ☐ 500v ☐ 550v ☐ 600v ☐ 450h ☐ 500h ☐ 550h ☐ 600h ☐

Serial No.		MODULE NO.												ALL MODULES FIRING
Year of Manufacture		1	2	3	4	5	6	7	8	9	10	11	12	
1. Module burner pressure in w.g/mbar Note 1 (all modules firing)														
2. Thermal rating:														
(i) Volume of gas, cubic (Note 1)	ft/litres													
(ii) Time for volume (Note 1)	seconds													
(iii) Heat input (Note 1)	Btu/h/kW													
{ (1) ÷ (2) x CV x 3600 Note 2 } { (1) ÷ (2) x CV Note 3 }														
3. Combustion data measured at sampling point at top of boiler (see Table 3)	(i) CO%													
	(ii) CO_2%													
	(iii) CO/CO_2													
4. Fan pressure Differential (Note 1)	in w.g./mbar													

Note 1: Delete units as appropriate.

Note 2: CV is 1031 Btu/cubic ft. if volume is measured in cu.ft. and gives heat input in Btu/h.

CV is 38.4 kJ/l if volume is measured in litres and gives heat input in kW.

Technical Training

The Caradon Plumbing Limited Technical Training Centre offers a series of first class training courses for domestic, commercial and industrial heating installers, engineers and system specifiers. For details of courses please ring:

.....01482 498432

Caradon Plumbing Limited pursues a policy of continuing improvement in the design and performance of its products. The right is therefore reserved to vary specification without notice.

September 2001 AO

CE

PO Box 103
National Avenue
Kingston upon Hull
HU5 4JN
Telephone 01482 492251
Facsimile 01482 448858

Registration No. 4049093
Registered Office
Kelburn House
7-19 Mosley Street
Newcastle Upon Tyne
NE1 1YE

Commercial Heating Technical Helpline 01482 498376

Caradon
Plumbing Limited